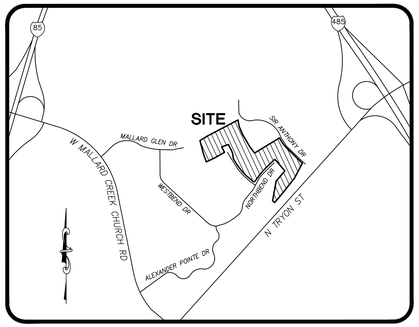


## VICINITY MAP
NTS

## SITE DATA

| | | |
|---|---|---|
| DEVELOPER | ASPEN HEIGHTS PARTNERS<br>8008 CORPORATE CENTER DRIVE, SUITE #201<br>CHARLOTTE, NC 28226 | |
| SITE AREA: | GROSS SITE ACREAGE:<br>RIGHT-OF-WAY DEDICATION:<br>NET SITE ACREAGE: | ±23.53 AC<br>±0.61 AC<br>±22.92 AC |
| PID: | 02903112, 02903122, 02903125, 02903124 | |
| EXISTING ZONING: | R-12(CD), R-3 | |
| PROPOSED ZONING: | R-12MF(CD) | |
| EXISTING USE: | VACANT | |
| PROPOSED USE: | MULTI-FAMILY | |
| TREE SAVE AREA REQUIRED: | 3.53 AC (23.57 AC x 15%) | |
| TREE SAVE AREA PROVIDED: | 3.79 AC | |

**REZONING CASE NUMBER: 2019-144**

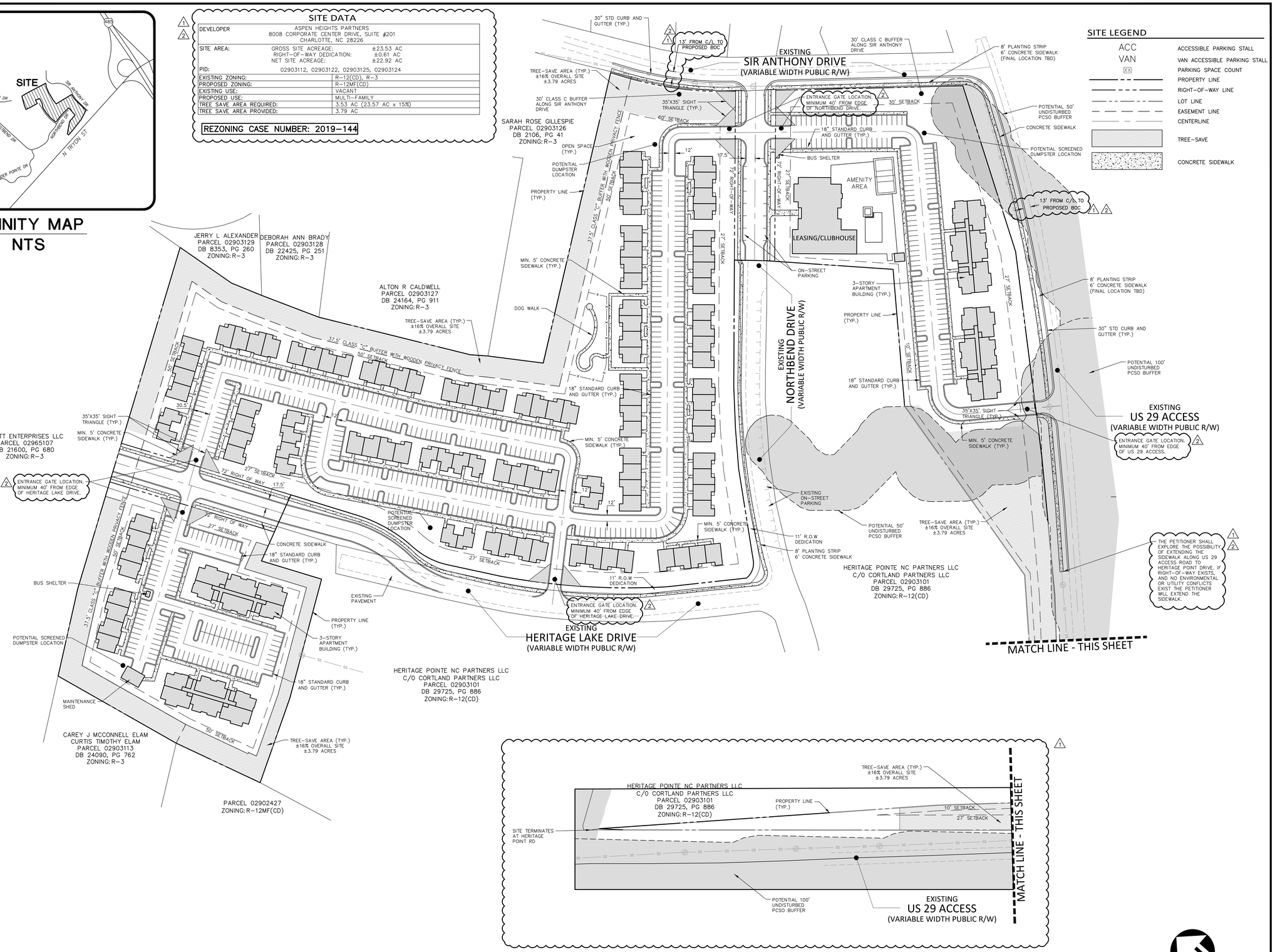


## SITE LEGEND

| | |
|---|---|
| ACC | ACCESSIBLE PARKING STALL |
| VAN | VAN ACCESSIBLE PARKING STALL |
| XX | PARKING SPACE COUNT |
| | PROPERTY LINE |
| | RIGHT-OF-WAY LINE |
| | LOT LINE |
| | EASEMENT LINE |
| | CENTERLINE |
| | TREE-SAVE |
| | CONCRETE SIDEWALK |




SEE REZONING NOTES ON SHEET RZ-2

GRAPHIC SCALE
0 40 80 160
1 inch = 80 ft.

PRELIMINARY DRAWING - NOT RELEASED FOR CONSTRUCTION


McADAMS
The John R. McAdams Company, Inc.
2905 Meridian Parkway
Durham, NC 27713

phone 919. 361. 5000
fax 919. 361. 2269
license number: C-0293, C-187

www.mcadamsco.com


**CLIENT**

ASPEN HEIGHTS PARTNERS
8008 CORPORATE CENTER DRIVE, SUITE #201
CHARLOTTE, NC 28226
PHONE: 704. 255. 5942

ASPEN HEIGHTS PARTNERS

# UNCC HERITAGE
## REZONING CONCEPT PLAN
## NORTHBEND DR. & HERITAGE LAKE DR.
CHARLOTTE, NORTH CAROLINA, 28262

**REVISIONS**

| NO. | DATE | |
|---|---|---|
| 1 | 12. 12. 2019 | PER 1ST SUBMITTAL COMMENTS |
| 2 | 01. 22. 2020 | PER 2ND SUBMITTAL COMMENTS |
| 3 | 03.13.2020 | PER 3RD SUBMITTAL COMMENTS |

**PLAN INFORMATION**

| | |
|---|---|
| PROJECT NO. | AHP-19010 |
| FILENAME | AHP19010-RZ1 |
| CHECKED BY | |
| DRAWN BY | AJB |
| SCALE | 1"=80' |
| DATE | 09. 18. 2019 |

**SHEET**

**REZONING PLAN**

# RZ-1

Y:\Projects\AHP\AHP-19010\04-Production\Engineering\Rezoning\AHP19010-RZ1.dwg, 3/13/2020 1:55:50 PM, Duval, Michael

**York Acquisitions, LLC**
**Development Standards**
**03/13/2020**
**Rezoning Petition No. 2019-144**

**Site Development Data:**
--**Acreage:** ± 23.53 acres
--**Tax Parcel #s:** 029-031-12, 029-031-22, 029-031-24, and 029-031-25
--**Existing Zoning:** R-3 and R-12(CD)
--**Proposed Zoning:** R-12MF(CD)
--**Existing Uses:** Vacant & Single-family Residential
--**Proposed Uses:** Residential dwellings units as permitted by right, and under prescribed conditions, together with accessory uses, as allowed in the R-12MF zoning district (all as more specifically described and restricted below in Section 5). The following use will not be allowed on the Site: Single Room Occupancy (SRO) residence.
--**Maximum Number of Residential Dwelling Units:** Up to 194 multi-family residential dwelling units as allowed by right and under prescribed conditions in the R-12MF zoning district. The proposed residential dwelling units may not be rented by the bedroom.
--**Maximum Building Height:** Up to three (3) stories and not to exceed a maximum average height at the front building line of 48 feet. Height to be measured per the Ordinance. Due to the topography of the Site some of the proposed building may have a half floor that will be below the grade of the front building line (a (3)/(4) split) this half floor will not be considered a story.
--**Parking:** As required by the Ordinance.

**1. General Provisions:**

a. **Site Location**. These Development Standards, the Technical Data Sheet, Schematic Site Plan and other site plan sheets form this rezoning plan (collectively referred to as the "Rezoning Plan") associated with the Rezoning Petition filed by York Acquisitions, LLC ("Petitioner") to accommodate the development of a high quality residential community on an approximately 23.53 acre site located at the intersection of Northbend Drive and Heritage Lake Drive (the "Site").

b. **Zoning Districts/Ordinance**. Development of the Site will be governed by the Rezoning Plan as well as the applicable provisions of the City of Charlotte Zoning Ordinance (the "Ordinance"). Unless the Rezoning Plan establishes more stringent standards, the regulations established under the Ordinance for the R-12MF(CD) zoning classification shall govern all development taking place on the Site, subject to the Optional Provisions provided below.

c. **Graphies and Alterations**. The schematic depictions of the uses, parking areas, sidewalks, structures and buildings, building elevations, driveways, streets, building and parking envelopes other development matters and site elements (collectively the "Development/Site Elements") set forth on the Rezoning Plan should be reviewed in conjunction with the provisions of these Development Standards. The layout, locations, sizes and formulations of the Development/Site Elements depicted on the Rezoning Plan are graphic representations of the Development/Site elements proposed. Changes to the Rezoning Plan not anticipated by the Rezoning Plan will be reviewed and approved as allowed by Section 6.207 of the Ordinance.

Since the project has not undergone the design development and construction phases, it is intended that this Rezoning Plan provide for flexibility in allowing some alterations or modifications from the graphic representations of the Development/Site Elements. Therefore, there may be instances where minor modifications will be allowed without requiring the Administrative Amendment Process per Section 6.207 of the Ordinance. These instances would include changes to graphics if they are:

i. minor and don't materially change the overall design intent depicted on the Rezoning Plan.

The Planning Director will determine if such minor modifications are allowed per this amended process, and if it is determined that the alteration does not meet the criteria described above, the Petitioner shall then follow the Administrative Amendment Process per Section 6.207 of the Ordinance; in each instance, however, subject to the Petitioner's appeal rights set forth in the Ordinance.

d. **Number of Buildings Principal and Accessory**. The total number of principal buildings to be developed on the Site will be limited to 41. Accessory buildings and structures located on the Site shall not be considered in any limitation on the number of buildings on the Site. Accessory buildings and structures will be constructed utilizing similar building materials, colors, architectural elements and designs as the principal building(s) located within the same Development Area as the accessory structure/building.

**2. Permitted Uses & Development Area Limitation:**

a. The Site may be developed with up to 194 multi-family residential dwellings units together with accessory uses allowed in the R-12MF zoning district as generally depicted on the Rezoning Plan. The following use will not be allowed on the Site: Single Room Occupancy (SRO) residence

b. The proposed residential dwelling units may not be rented by the bedroom.

c. The Site will participate in the Nine Choice Program and will implement the Gold Standard.

d. The Site will employ a Courtesy Officer. One of the units developed on the Site will be set aside for occupancy by the "Courtesy Officer" for the Site.

**3. Transportation Improvements and Access:**

**I. Proposed Improvements:**

The Petitioner plans to provide or cause to be provided on its own or in cooperation with other parties who may implement portions of the improvements, the improvements set forth below to benefit overall traffic patterns throughout the area in accordance with the following implementation provisions:

*The following Transportation Improvements are also illustrated on Figure 9 and on Sheet RZ-2 of the Rezoning Plan. The Exhibits on Sheet RZ-2 is to be used in conjunction with the following notes to determine the extent of the proposed improvements (reference to a number or letter when describing an improvement corresponds to the number or letter found on Figure 9 and for the proposed improvement).*

The following roadway improvements will be made by the Petitioner as part of the redevelopment of the Site as proposed by the rezoning Plan:

Sir Anthony Drive and Access B:
**a.** The Petitioner shall construct Access B with one ingress and one egress lane (1 shared left-right turn lane).
US 29 Service Road and Access A:
b. The Petitioner shall construct Access A with one ingress and one egress lane (1shared left-right).

**II. Standards, Phasing and Other Provisions.**

**a. CDOT Standards.** All of the foregoing public roadway improvements will be subject to the standards and criteria of CDOT (as it relates to the roadway improvements within its road system authority). It is understood that such improvements may be undertaken by the Petitioner on its own or in conjunction with other development or roadway projects taking place within the broad east Mecklenburg area, by way of a private/public partnership effort or other public sector project support.

**b. Substantial Completion.** Reference to "substantial completion" for certain improvements as set forth in the provisions of Section 3.I above shall mean completion of the roadway improvements in accordance with the standards set forth in Section 3.II.a above provided, however, in the event certain non-essential roadway improvements (as reasonably determined by CDOT) are not completed at the time that the Petitioner seeks to obtain a certificate of occupancy for building(s) on the Site in connection with related development phasing described above, then CDOT will instruct applicable authorities to allow the issuance of certificates of occupancy for the applicable buildings, and in such event the Petitioner may be asked to post a letter of credit or a bond for any improvements not in place at the time such a certificate of occupancy is issued to secure completion of the applicable improvements.

**c. Right-of-way Availability.** It is understood that some of the public roadway improvements referenced in subsection a. above may not be possible without the acquisition of additional right of way. If after the exercise of diligent good faith efforts over a minimum of a 60 day period, the Petitioner is unable to acquire any land necessary to provide for any such additional right of way upon commercially reasonable terms and at market prices, then CDOT, the City of Charlotte Engineering Division or other applicable agency, department or governmental body agree to proceed with acquisition of any such land. In such event, the Petitioner shall reimburse the applicable agency, department or governmental body for the cost of any such acquisition including compensation paid by the applicable agency, department or governmental body for any such land and the expenses of such proceedings. Furthermore, in the event public roadway improvements referenced in subsection a. above are delayed because of delays in the acquisition of additional right-of-way as contemplated herein and such delay extends beyond the time that the Petitioner seeks to obtain a certificate of occupancy for building(s) on the Site in connection with related development phasing described above, then CDOT will instruct applicable authorities to allow the issuance of certificates of occupancy for the applicable buildings; provided, however, Petitioner continues to exercise good faith efforts to complete the applicable road-way improvements; in such event the Petitioner may be asked to post a letter of credit or a bond for any improvements not in place at the time such a certificate of occupancy is issued to secure completion of the applicable improvements.

**d. Alternative Improvements.** Changes to the above referenced roadway improvements can be approved through the Administrative Amendment process upon the determination and mutual agreement of Petitioner, CDOT and the Planning Director; provided, however, the proposed alternate transportation improvements provide (in the aggregate) comparable transportation network benefits to the improvements identified in this Petition.

**III. Access:**

a. Access to the Site will be from US 29 Service Road, Northbend Drive, Sir Anthony Drive, and Heritage Lake Drive in the manner generally depicted on the Rezoning Plan.

b. The Petitioner will install gates at each of the access points. The location of the proposed gates to be reviewed and approved by CDOT during the land development approval process for the Site. The location of the proposed gates on the driveway to the US 29 service road will be located a minimum of 40 feet away from the access road.

c. The Site will employ a shuttle service that will provide the residents of the community shuttle service to the UNCC campus as well as the CATS Blue Line station(s) located in the University Area.

d. The Petitioner agrees to fund and install up to three (3) speed humps along Westbend Drive if Westbend Drive meets speed hump warrants. The offer to install the speed humps will expire one-year after the last certificate of occupancy for the Site is issued.

e. All transportation improvements shall be constructed and approved prior to the release of a certificate of occupancy for the first building constructed on the Site. The petitioner may post a bond for any improvements not completed at the time a certificate of occupancy is requested.

f. The placement and configuration of the vehicular access point is subject to minor modifications required to accommodate final site development and construction plans and to any adjustments required for approval by the CDOT and NCDOT in accordance with applicable published standards.

g. The alignment of the internal vehicular circulation and driveways may be modified by the Petitioner to accommodate changes in traffic patterns, parking layouts and any adjustments required for approval by CDOT in accordance with published standards.

h. The Petitioner will dedicate via fee simple conveyance any additional right-of-way indicated on the Rezoning Plan as right-of-way to be dedicated, the additional right-of-way will be dedicated prior to the issuance of the first certificate of occupancy. The Petitioner will provide a permanent sidewalk easement for any of the proposed sidewalks located along the public streets located outside of the right-of-way. The permanent sidewalk easement will be located a minimum of two (2) feet behind the sidewalk where feasible.

**4. General Architectural Standards:**

a. The building materials used on the principal buildings constructed on Site will be a combination of portions of the following: brick, stone, precast stone, precast concrete, synthetic stone, cementitious fiber board, stucco, EIFS, decorative block and/or wood. Vinyl or aluminum as a building material may only be used on windows, soffits and on handrails/railings.

b. The following architectural commitments shall apply to the permanent buildings located on the Site; at least 20% of the exterior building facades facing the existing and proposed public streets, exclusive of windows, doors, balconies and roofs, shall be constructed of brick, stone, pre-cast stone or pre-cast concrete as generally depicted on the Rezoning Plan. The building facades oriented toward the interior of the Site and/or the proposed parking areas may have less than 20% of the exterior building facades exclusive of windows, doors, balconies and roofs, constructed of brick, stone, pre-cast stone or pre-cast concrete.

c. Meter banks will be screened from adjoining properties and from the abutting public streets.

d. HVAC and related mechanical equipment will be screened from public view and from view of adjacent properties at grade.

e. Dumpster and recycling area will be enclosed by a solid wall or fence with one side being a decorative gate. The wall or fence used to enclose the dumpster will be architecturally compatible with the building materials and colors used on the principal buildings. The location of the proposed dumpster and recycling area is generally depicted on the Rezoning Plan.

f. The front door of each unit must be equipped with a 160 to 180-degree peephole.

g. Each door that provides access to the unit will be equipped with self-closing and locking doors.

h. Building numbers must be visible from the street, and internal directional signage will be provided to help located the proposed buildings.

i. Blue Light Emergency Phones will be installed in the parking areas.

j. The property will install a surveillance system.

5. **Streetscape, Buffers, Setbacks, Yards, Open Space and Landscaping:**

a. A 27-foot setback as measured from the right-of-way of US-29 Service Road, Northbend Drive, and Heritage Lake Drive will be provided as generally depicted on the Rezoning Plan. The setback along Northbend Drive, and Heritage Drive may be reduced to 15 feet as allowed by the Ordinance (Section 19.f).

b. Along Sir Anthony Drive a 30-foot setback and a 60-foot setback as generally indicated on the Rezoning Plan will be maintained. In addition, within the proposed setback along Sir Anthony Drive a Class C Buffer will also be provided.

c. Along the Site's internal parking areas, the Petitioner will provide a sidewalk and crosswalk network that links to the building on the Site and to the sidewalks along the abutting public streets in the manner depicted on the Rezoning Plan. The minimum width for this internal sidewalk will be five (5) feet.

d. The Petitioner will provide an eight (8) foot planting strip and a six (6) foot sidewalk along the Site's frontage on US-29 Service Road, Northbend Drive, Sir Anthony Drive, and Heritage Lake Drive as generally depicted on the Rezoning Plan and as required by the subdivision regulations and chapter 19.

e. Buffers as required by the ordinance will be installed as generally depicted on the Rezoning Plan. The Petitioner reserves the right to reduce buffer widths with a fence or berm as allowed by the Ordinance, or to eliminate a proposed fence and increase the buffer width as allowed by the Ordinance.

f. The Petitioner may install security fencing around the perimeter of the Site. The security fencing will have pedestrian gates.

g. The Petitioner shall install curb and gutter thirteen (13) feet from centerline to the back of curb per subdivision ordinance along US 29 Access Road and Sir Anthony Drive.

h. The Petitioner shall explore the possibility of extending the sidewalk along US 29 Access Road to Heritage Point Drive. If right-of-way exists, and no environmental or utility conflicts exist the petitioner will extend the sidewalk along the US 29 Service Road to Heritage Point Drive.

i. Any required or provided landscaping will meet the following standards: All shrubbery will be trimmed to maintain a maximum height between three (3) and four (4) feet; all trees must be limbed up to six (6) to seven (7) feet.

6. **General Design Guidelines:**

a. Buildings shall front (the side of a building that has windows will also be considered a front) a minimum of 65% of the total street frontage on the site (exclusive of driveways, pedestrian access points, usable open space, tree save areas, natural areas, and/or tree re-planting areas).

b. Building Massing – Buildings exceeding 120 feet in length shall include modulations of the building massing/façade plane (recess, projection, architectural treatment, etc.). Modulations shall be a minimum of 10 feet wide and shall extend or recess a minimum of 5 feet, extending through all floors.

c. Vertical Modulation and Rhythm – Building elevations shall be designed with recognizable vertical bays or articulated architectural facade features. The bays and features may include, but not limited to a combination of exterior wall offsets, projections, and/or recesses, pilasters, and change in materials.

d. Building Base – Buildings shall be designed with a recognizable architectural base. A minimum of three elevations of each building will be articulated with a water table of Preferred Exterior Building Materials listed above of a minimum of three (3) feet in height. *(Preferred building materials will be defined as brick, stone, precast stone, precast concrete, stucco, and decorative block).*

e. Building elevations facing streets shall not have expanses of blank walls greater than 20 feet.

f. Architectural features such as, but not limited to, banding, medallions, or design features or materials will be provided to avoid a sterile, unarticulated blank treatment of such walls.

g. Roof form and rooflines shall be designed to avoid the appearance of a large monolithic roof structure through the following standards:

(i). Long rooflines (pitched or flat) shall avoid continuous expanses without variation by including changes in height and/or roof form (e.g. dormers, gables, etc.).

(ii). For pitched roofs the allowed minimum pitch shall be 4:12 (four feet in vertical height for every twelve feet in horizontal length), excluding buildings with a flat roof and parapet walls.

h. Utility structures need to be screened architecturally or with evergreen plant material.

j. Walls shall be designed to match and complement the building architecture of the residential buildings of the subject property.

**7. Open Space:**

a. Improved open space areas will be provided as generally depicted on the Rezoning Plan. The proposed open space amenity areas will be improved with landscaping, seating areas, hardscape elements and shade structures as applicable and appropriate to the proposed amenity area.

b. The petitioner will provide an open space area along Sir Anthony Drive as generally depicted on the rezoning plan.

**8. Environmental Features:**

a. The Petitioner shall comply with the Charlotte City Council approved and adopted Post Construction Controls Ordinance.

b. The location, size and type of storm water management systems depicted on the Rezoning Plan are subject to review and approval as part of the full development plan submittal and are not implicitly approved with this rezoning. Adjustments may be necessary in order to accommodate actual storm water treatment requirements and natural site discharge points.

b. The Site will comply with the Tree Ordinance.

**9. Lighting:**

a. All new lighting shall be full cut-off type lighting fixtures excluding lower, decorative lighting that may be installed along the driveways, sidewalks, parking areas and courtyards.

b. Detached lighting on the Site will be limited to 26 feet in height.

c. The Petitioner will install pedestrian scale lighting along the Hwy. 29 Access road from Sir Anthony Drive to Heritage Pointe Road. Lighting will be installed along the western edge of the US 29 Access Road.

**10. Amendments to the Rezoning Plan:**

a. Future amendments to the Rezoning Plan (which includes these Development Standards) may be applied for by the then Owner or Owners of the applicable Development Area portion of the Site affected by such amendment in accordance with the provisions of Chapter 6 of the Ordinance.

**11. Binding Effect of the Rezoning Application:**

a. If this Rezoning Petition is approved, all conditions applicable to the development of the Site imposed under the Rezoning Plan will, unless amended in the manner provided under the Ordinance, be binding upon and inure to the benefit of the Petitioner and subsequent owners of the Site and their respective heirs, devisees, personal representatives, successors in interest or assigns.

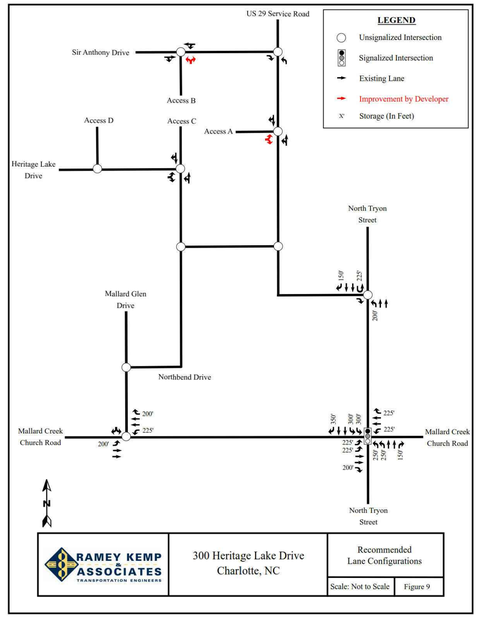



McADAMS
The John R. McAdams Company, Inc.
2905 Meridian Parkway
Durham, NC 27713

phone 919. 361. 5000
fax 919. 361. 2269
license number: C-0293, C-187

www.mcadamsco.com


**CLIENT**

ASPEN HEIGHTS PARTNERS
8008 CORPORATE CENTER DRIVE, SUITE #201
CHARLOTTE, NC 28226
PHONE: 704. 255. 5942

ASPEN HEIGHTS PARTNERS

# UNCC HERITAGE
REZONING CONCEPT PLAN
NORTHBEND DR. & HERITAGE LAKE DR.
CHARLOTTE, NORTH CAROLINA, 28262

**REVISIONS**

| NO. | DATE | |
|---|---|---|
| 1 | 12. 12. 2019 | PER 1ST SUBMITTAL COMMENTS |
| 2 | 01. 22. 2020 | PER 2ND SUBMITTAL COMMENTS |
| 3 | 03.13.2020 | PER 3RD SUBMITTAL COMMENTS |

**PLAN INFORMATION**

| | |
|---|---|
| PROJECT NO. | AHP-19010 |
| FILENAME | AHP19010-RZ1 |
| CHECKED BY | |
| DRAWN BY | AJB |
| SCALE | N/A |
| DATE | 09. 18. 2019 |

**SHEET**

**REZONING NOTES**

**RZ-2**

PRELIMINARY DRAWING - NOT RELEASED FOR CONSTRUCTION

Y:\Projects\AHP\AHP-19010\04-Production\Engineering\Rezoning\AHP19010-RZ1.dwg, 3/15/2020 9:22:32 AM, Duvall, Michael