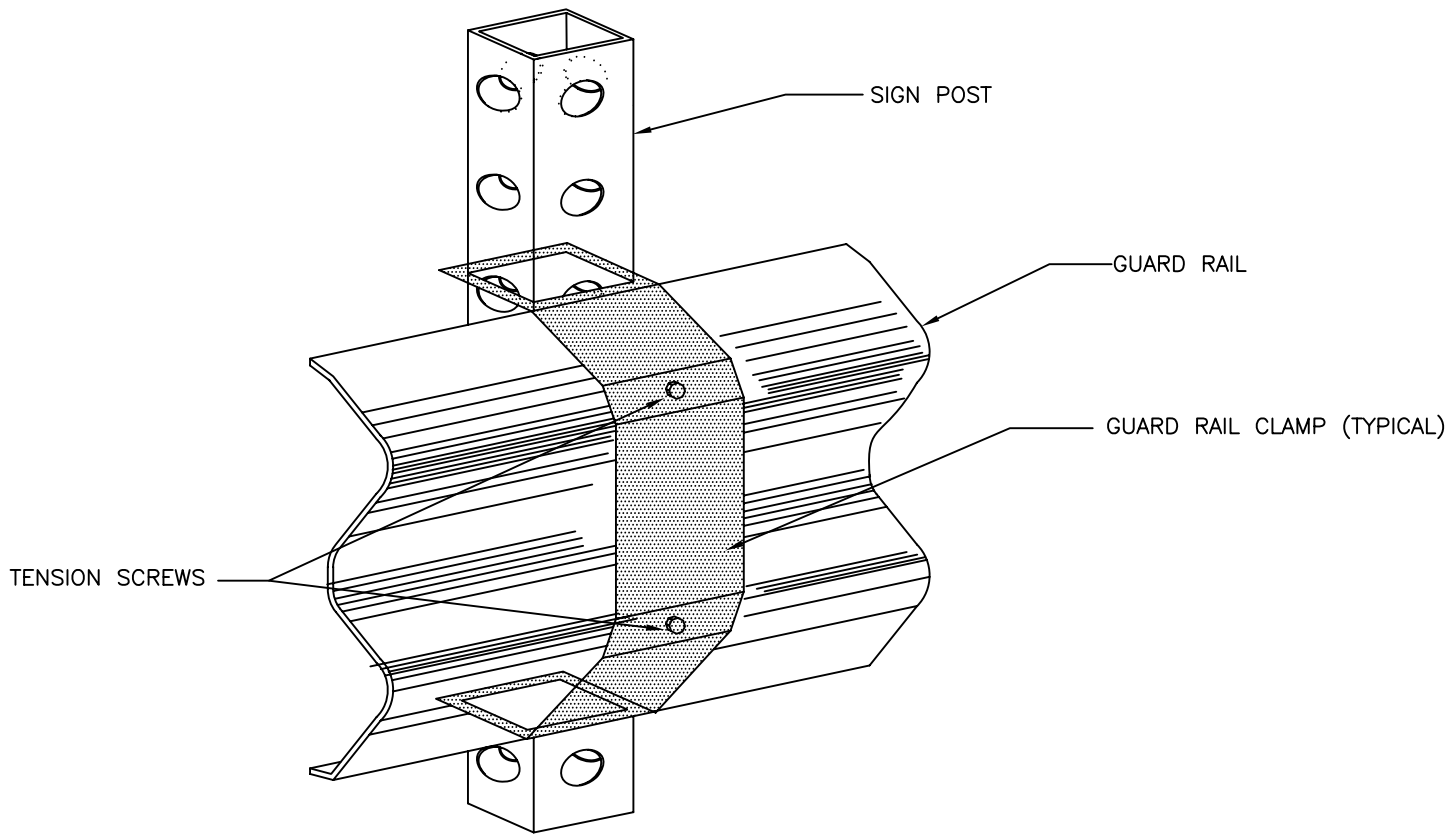

NOT TO SCALE

CHARLOTTE.

CITY OF CHARLOTTE
LAND DEVELOPMENT STANDARDS
INCLUDES CHARLOTTE ETJ

END OF ROADWAY MARKER GUARD RAIL CLAMP INSTALLATION

STD. NO.	REV.
50.08B	4