SKIMMER SEDIMENT BASIN DESIGN CRITERIA	
DRAINAGE AREA (ACRES)	< 10 AC.
MIN. LENGTH TO WIDTH RATIO	2:1
MAX. LENGTH TO WIDTH RATIO	6:1
MIN. VOLUME REQUIRED	1800 (CU. FT. PER AC. DISTURBED)
SURFACE AREA REQUIRED	325 (SQ. FT. PER CFS Q10)

PLAN VIEW

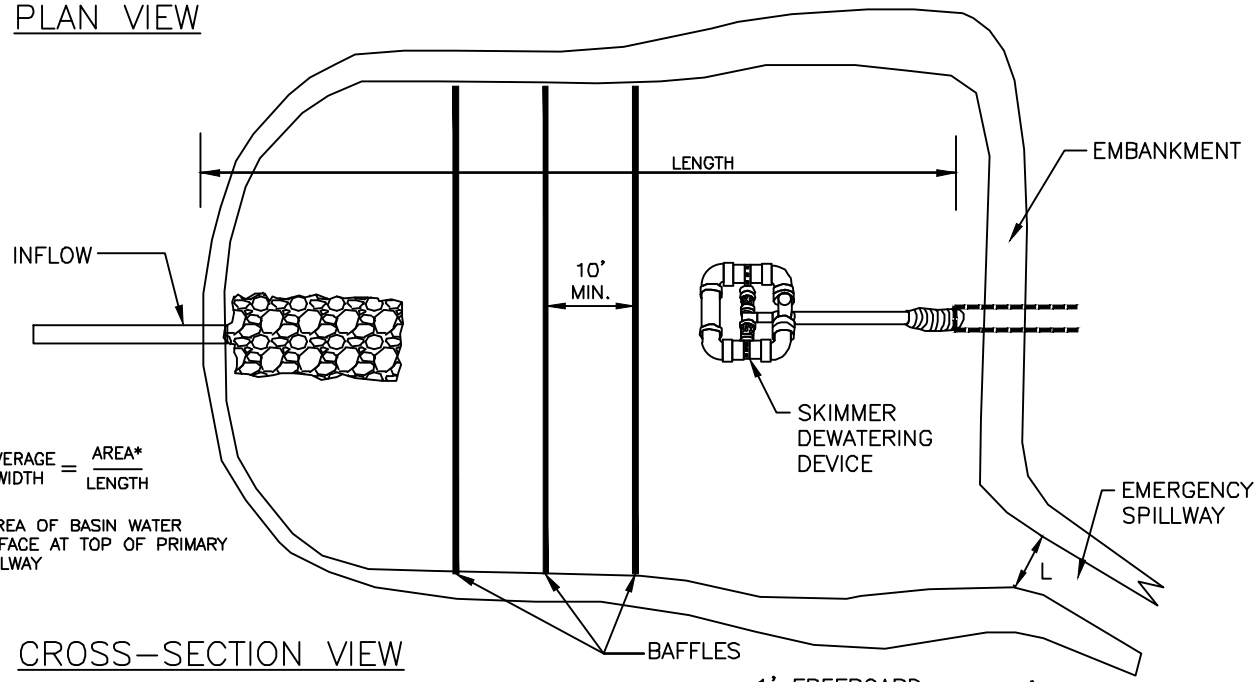

$$\text{AVERAGE WIDTH} = \frac{\text{AREA*}}{\text{LENGTH}}$$

* AREA OF BASIN WATER SURFACE AT TOP OF PRIMARY SPILLWAY

NOTES:

1. REFER TO NCESCPDM SECTION #6.64 FOR ADDITIONAL DESIGN SPECIFICATIONS REGARDING SKIMMER SEDIMENT BASINS.
2. REFER TO STD. #30.19 FOR BAFFLE SPACING AND INSTALLATION
3. SKIMMER INVERT ELEVATION = BASIN BOTTOM + 1' MIN.
4. H = SPILLWAY ELEVATION – SKIMMER INVERT ELEVATION

CROSS–SECTION VIEW

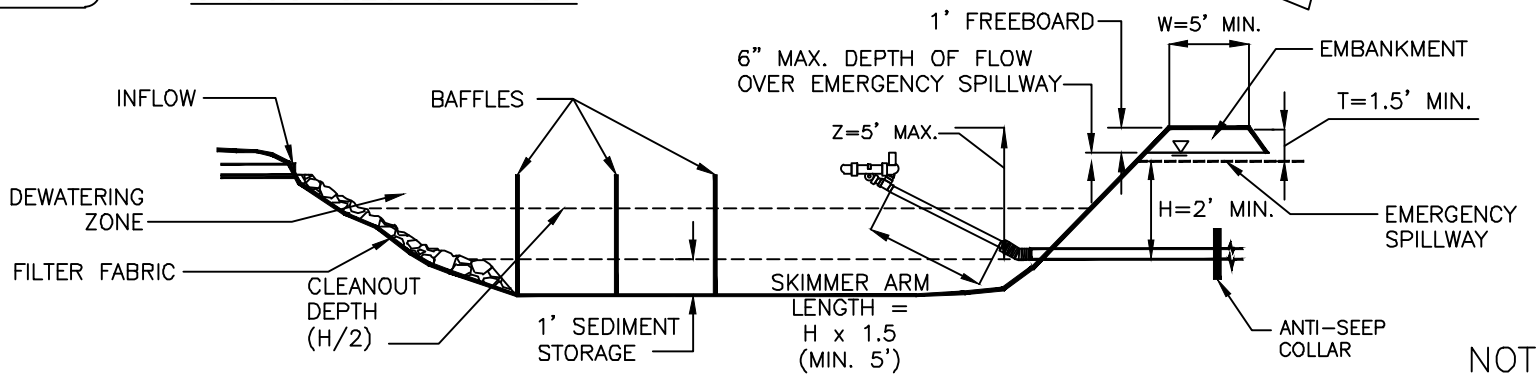

NOT TO SCALE

DATA BLOCK

BASIN	DRAINAGE AREA (ACRES)	DENUDED AREA (ACRES)	Q_{10}	BASIN VOLUME		BASIN SURFACE AREA		CLEANOUT DEPTH (FT.) H/2	H (FEET)	Z (FEET)	L (FEET)	T (FEET)	W (FEET)	SKIMMER PIPE DIAMETER	SKIMMER ORIFICE DIAMETER
				REQUIRED (CUBIC FT.)	PROVIDED (CUBIC FT.)	REQUIRED (SQ FT.)	PROVIDED (SQ FT.)								

CHARLOTTE.

CITY OF CHARLOTTE
LAND DEVELOPMENT STANDARDS
INCLUDES CHARLOTTE ETJ

SKIMMER SEDIMENT BASIN

STD. NO.	REV.
30.02A	13