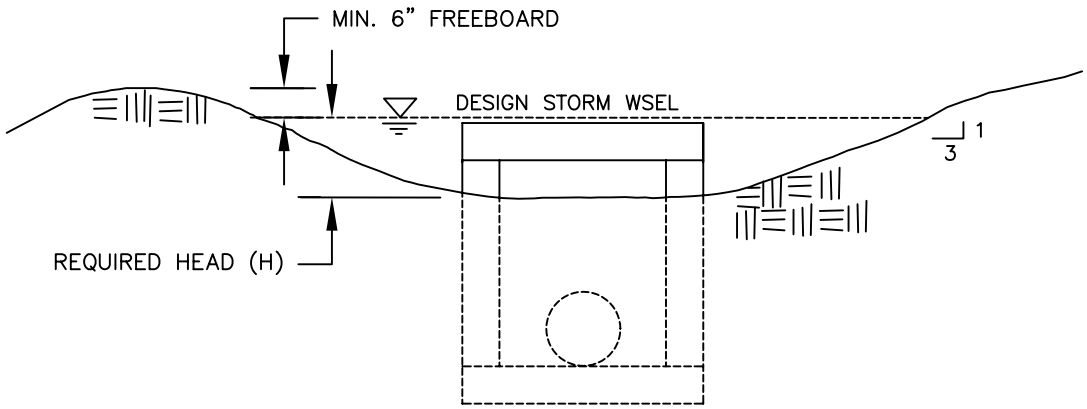

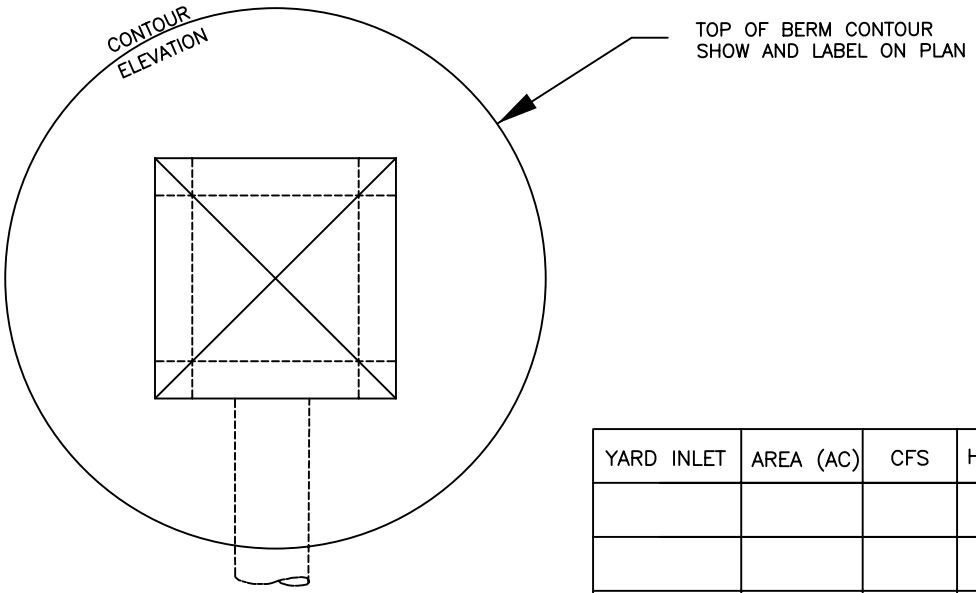

YARD INLET	AREA (AC)	CFS	HEAD H (FT)	COMMENT

CHARLOTTE.

CITY OF CHARLOTTE
LAND DEVELOPMENT STANDARDS
INCLUDES CHARLOTTE ETJ

GRADING AT DROP INLET

NOT TO SCALE

STD. NO. 20.35 | REV.