GENERAL NOTES:

1. SEE NCDOT STANDARD 840.01 FOR DETAILS BASED ON PIPE SIZE PER CROSS SECTION.
2. CONSTRUCT TWO SINGLE BASINS PER NCDOT STANDARD WITH DOUBLE INTERIOR WALL.
3. ALL CONCRETE TO BE 3600 P.S.I COMPRESSIVE STRENGTH.
4. BASE SLAB SHALL BE MONOLITHIC.
5. SEE CLDSM STANDARDS #10.29 AND #10.30 FOR PLACEMENT OF CATCH BASIN.
6. PIPE SECTION D2 CONNECTING CATCH BASINS SHALL HAVE A MINIMUM DIAMETER SAME AS OF OUTLET PIPE D3.
7. ALL REINFORCING STEEL SHOWN ON NCDOT STANDARDS IS TO BE PROVIDED AS CONTINUOUS MEMBERS. (NO LAPS, USED AS A SINGLE CONTINUOUS BAR IN THE SLAB)
8. WEEP HOLES SHALL BE PLACED IN BACK WALL WITH FILTER FABRIC OR STONE ON BACK SIDE

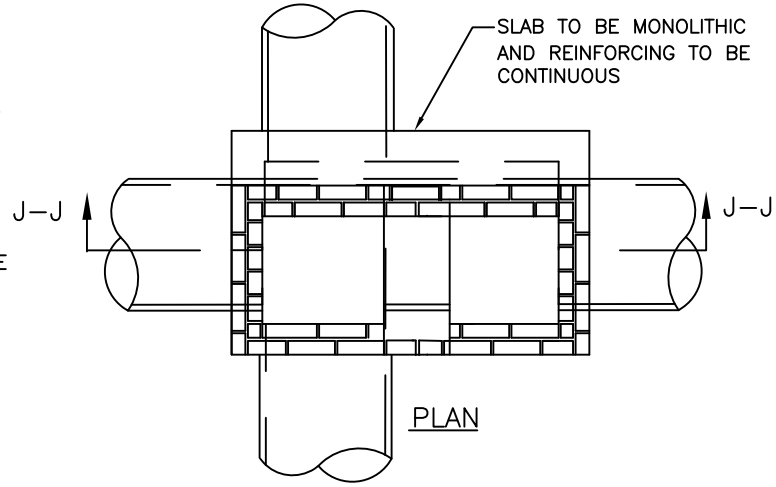


PLAN

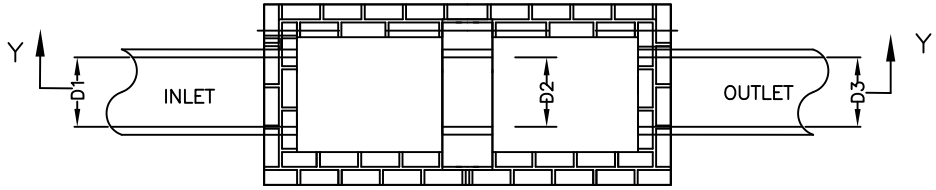


PLAN

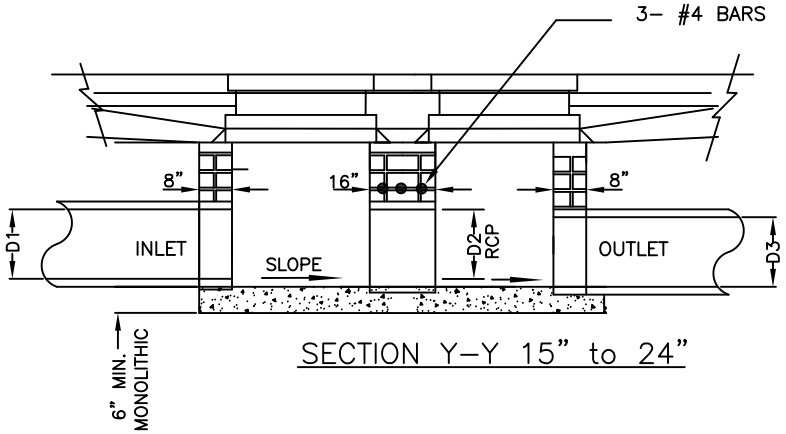


SECTION Y–Y 15" to 24"

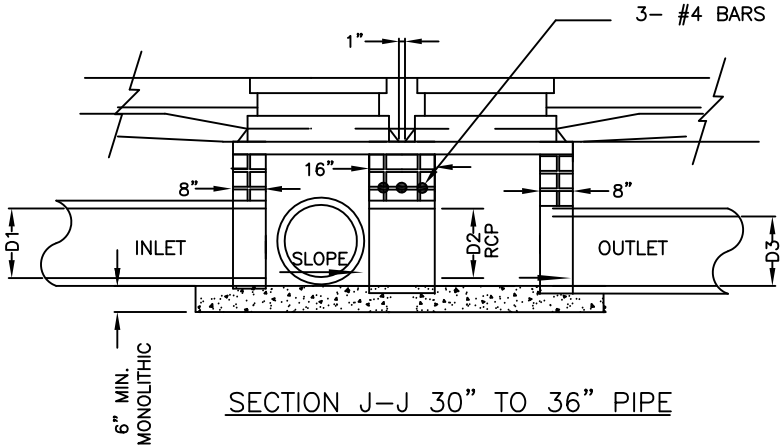


SECTION J–J 30" TO 36" PIPE

NOT TO SCALE

CHARLOTTE.

CITY OF CHARLOTTE
LAND DEVELOPMENT STANDARDS
INCLUDES CHARLOTTE ETJ

# BRICK DOUBLE CATCH BASIN 15" THRU 36" PIPE

| STD. NO. | REV. |
|---|---|
| 20.03 | 8 |