NOTES:

1. DETAILS SHOWN SHALL BE CONSTRUCTED IN ACCORDANCE WITH CITY STANDARDS.
2. DITCH TYPE STREET REQUIRES APPROVAL OF CITY ENGINEER.
3. MINIMUM CURB RADIUS ON INTERIOR DRIVES AND PARKING AREAS IS 10'
4. THIS DETAIL IS NOT TO BE USED TO MEET INTERNAL/EXTERNAL CONNECTIVITY REQUIREMENTS OF THE SUBDIVISION ORDINANCE AND ZONING ORDINANCE.

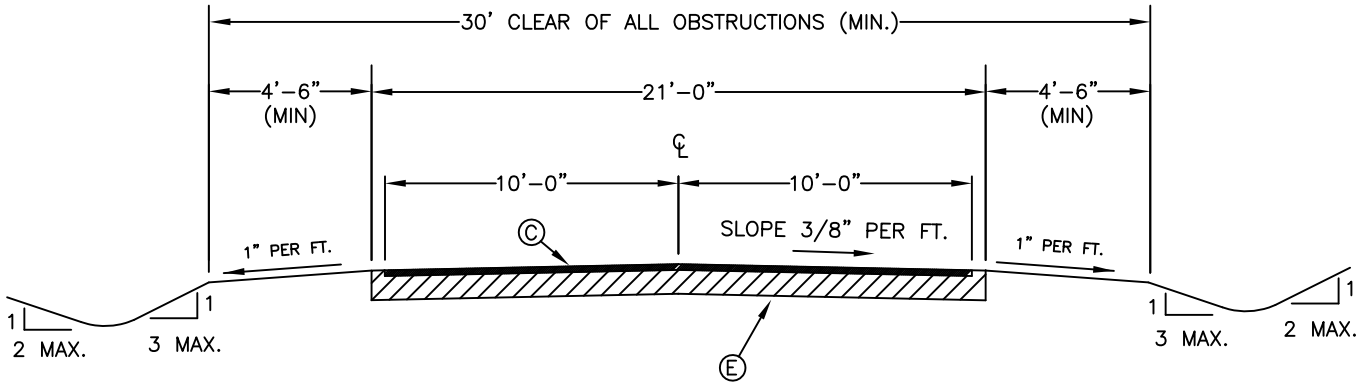

DITCH TYPE

GUIDELINES FOR PRIVATE STREET DESIGN:

1. INTERNAL STREET ALIGNMENT:
   MAXIMUM GRADE: 10%
   MINIMUM VERTICAL CURVE "K" VALUES: 10/20 (CREST/SAG)
   MINIMUM HORIZONTAL CURVE CENTERLINE RADIUS: 50 FT.
2. INTERSECTION WITH PUBLIC STREET:
   SAME AS FOR PUBLIC STREET. SEE GENERAL NOTES, SECTION I.B.2.
   5% MAXIMUM GRADE WITHIN 40 FEET OF PUBLIC STREET INTERSECTION BEGINNING FROM EDGE OF PAVEMENT LINE.

NOTE: VARIATIONS ON THESE GUIDELINES WILL BE REVIEWED ON A CASE BY CASE BASIS BY CITY STAFF.

PAVEMENT SCHEDULE

Ⓒ 1.5" BITUMINOUS CONCRETE SURFACE COURSE, TYPE SF9.5A OR 1.5" BITUMINOUS CONCRETE SURFACE COURSE, TYPE I-2.

Ⓔ 6" COMPACTED AGGREGATE BASE COURSE OR 4" BITUMINOUS CONCRETE BASE COURSE, TYPE B25.0B OR 4" BCBC TYPE HB.

Ⓡ CURB AND GUTTER (REFERENCE 10.17A AND B)

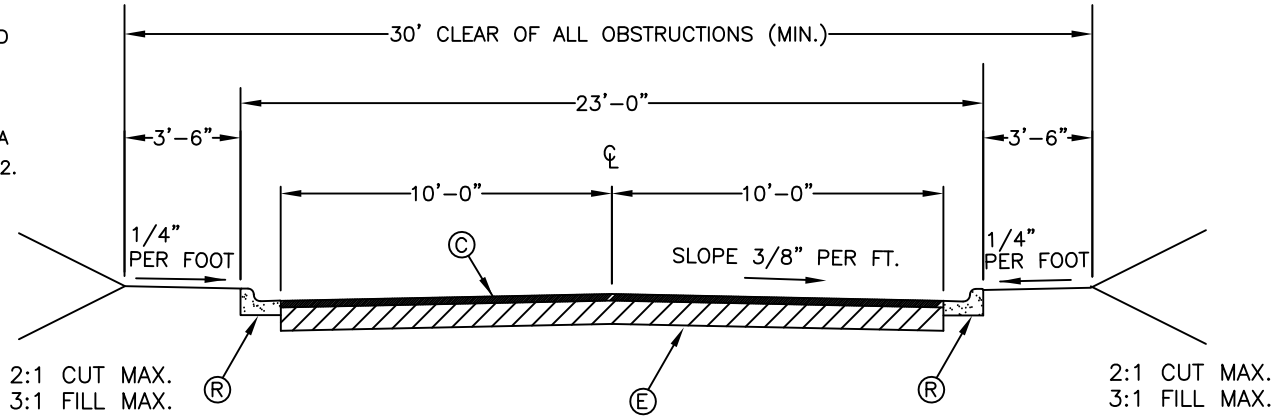

CURB AND GUTTER

NOT TO SCALE

CHARLOTTE.	CITY OF CHARLOTTE LAND DEVELOPMENT STANDARDS INCLUDES CHARLOTTE ETJ	PRIVATE STREET TYPICAL SECTIONS	STD. NO. 11.13 / REV. 8