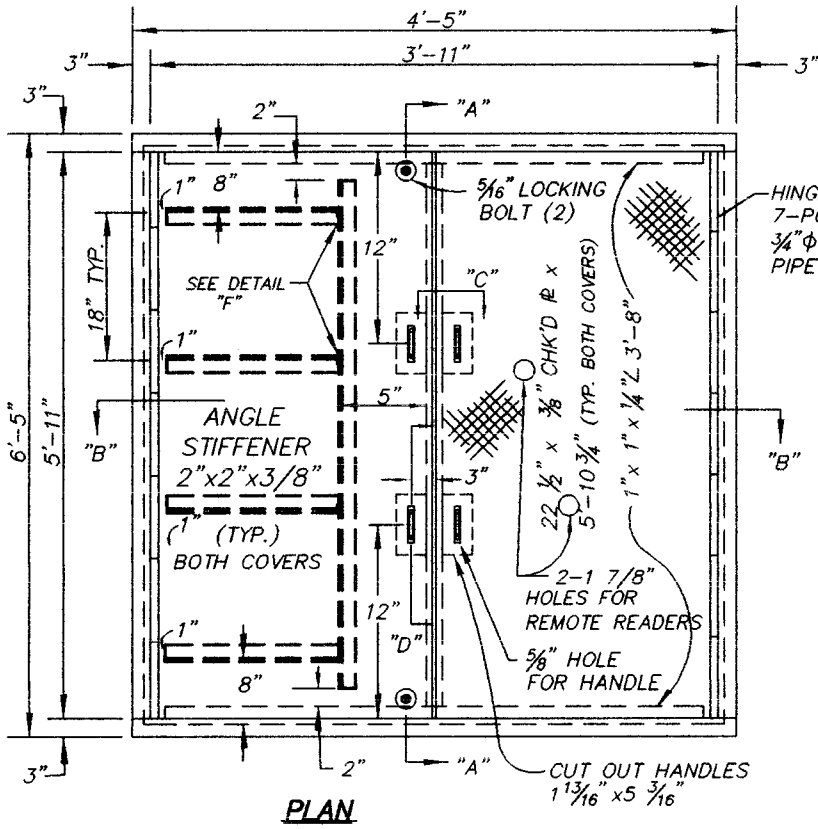

PLAN

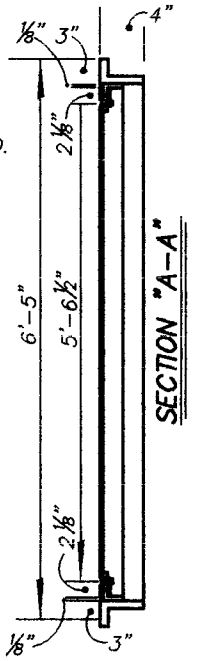

SECTION "A-A"

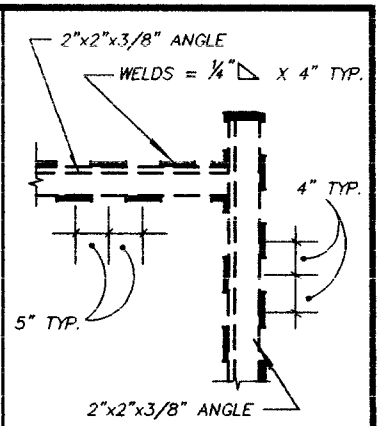

STIFFENER WELD DETAIL "F"

NOTE:
STIFFNER TO BE WELDED TO BACK OF METER VAULT COVER USING WELD PATTERN AS SHOWN.

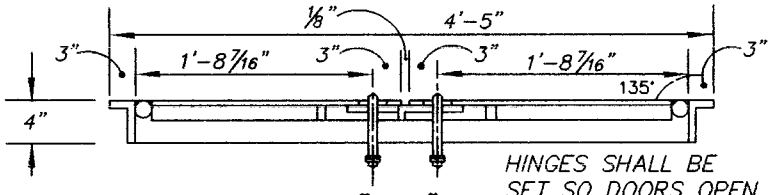

SECTION "B-B"

HINGES SHALL BE SET SO DOORS OPEN 45° BEYOND VERTICAL

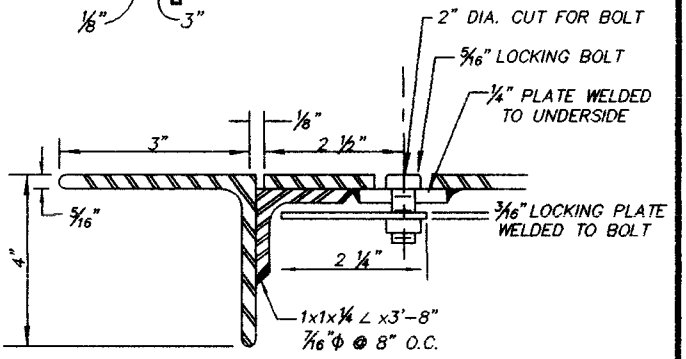

DETAIL "A" - LOCKING BOLT (2)

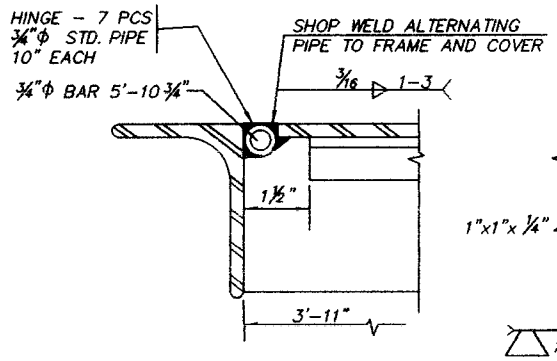

DETAIL "B" HINGE

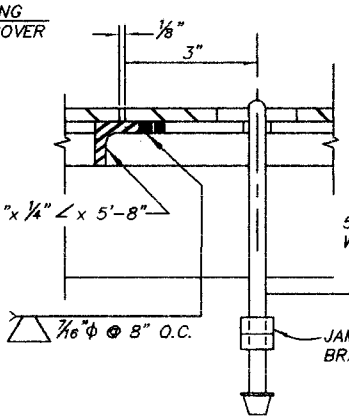

DETAIL "C" HANDLE (2)

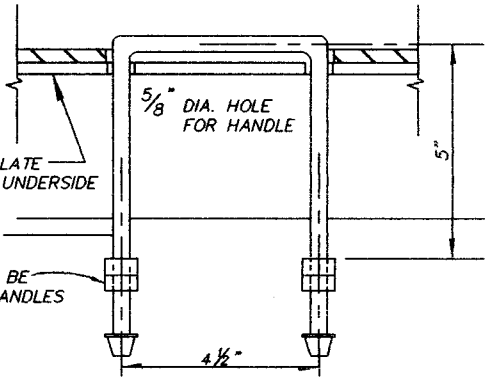

DETAIL "D" HANDLE

NOTES:

SERVICE NUMBER TO BE BEAD WELDED ON FRAME IN 2 1/2" LETTERS.

FRAME AND COVER TO BE SHOP COATED WITH ZINC CHROMATE PRIMER AND FIELD COATED WITH ONE COAT OF COMPATIBLE BLACK ENAMEL.

CHARLOTTE-MECKLENBURG UTILITY DEPARTMENT
ENGINEERING DIVISION
CHARLOTTE, NORTH CAROLINA

Job No. File No.
Scales
PLAN NO SCALE
PROFILE
Hor.
Vert.
As Built Date

STANDARD DETAIL WATER

FRAME AND COVER 6' X 4' METER VAULT

No.	Date	By	Revision

Surveyed By	Designed By	Drawn By	Project-Engr	Approved By	Date	Sheet	Of
		JRM		RD Moody	2/01	28	

SDW28.DWG
11/29/99