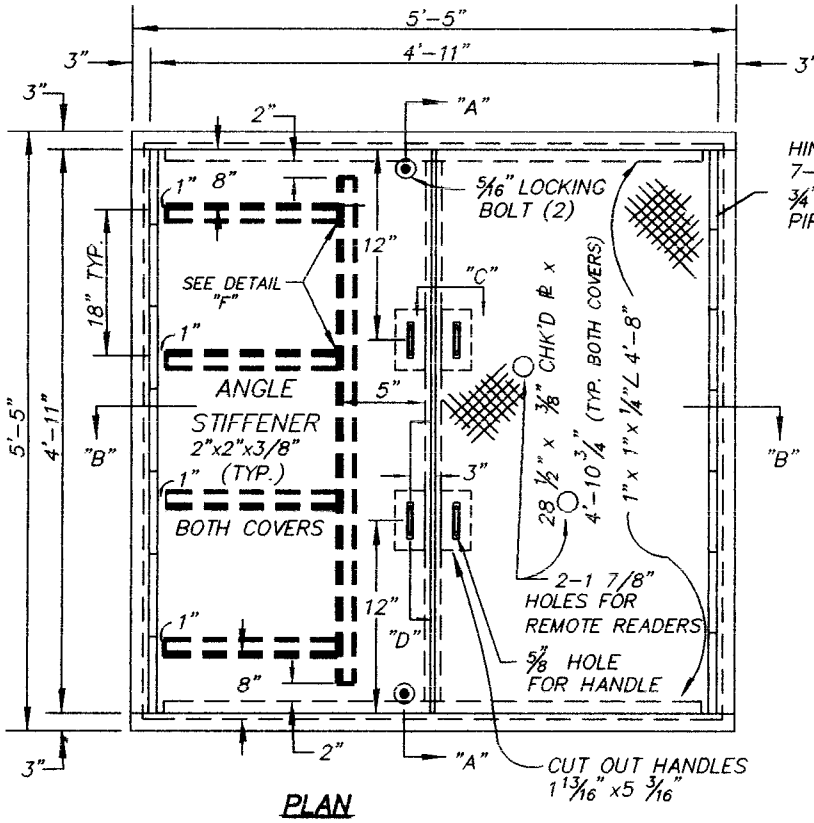

PLAN

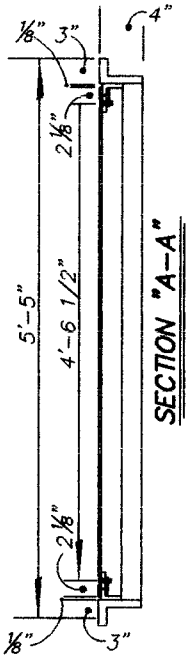

SECTION "A-A"

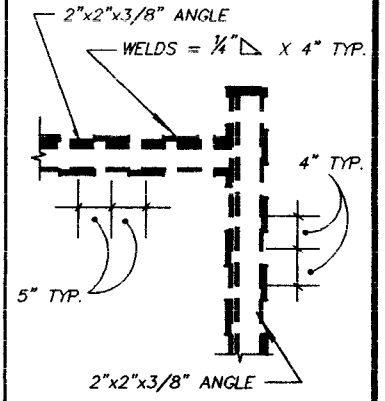

STIFFENER WELD DETAIL "F"

NOTE:
STIFFNER TO BE WELDED TO BACK OF METER VAULT COVER USING WELD PATTERN AS SHOWN.

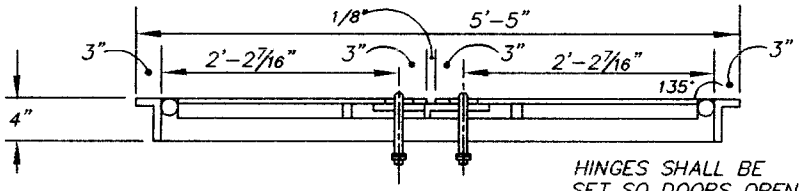

SECTION "B-B"

HINGES SHALL BE SET SO DOORS OPEN 45° BEYOND VERTICAL

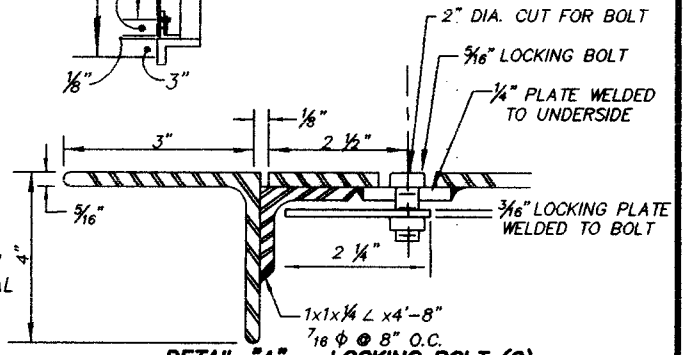

DETAIL "A" - LOCKING BOLT (2)

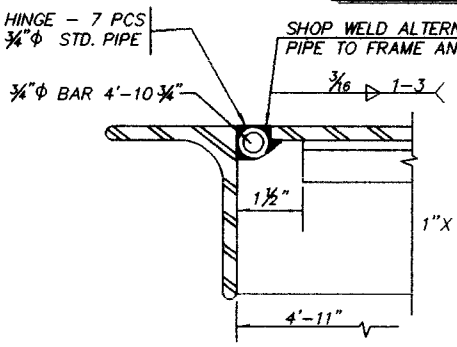

DETAIL "B" HINGE

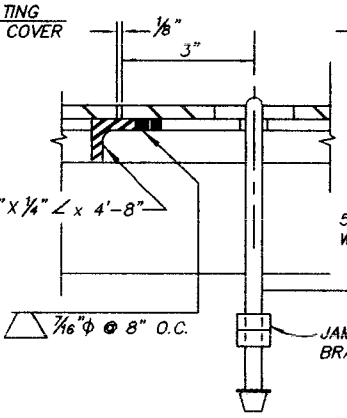

DETAIL "C" HANDLE (2)

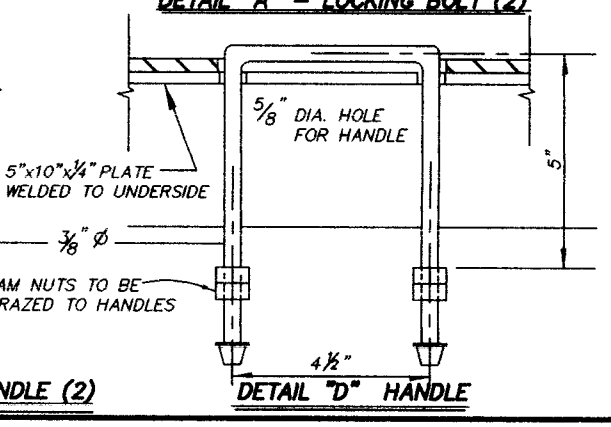

DETAIL "D" HANDLE

NOTES:

SERVICE NUMBER TO BE BEAD WELDED ON FRAME IN 2 1/2" LETTERS.

FRAME AND COVER TO BE SHOP COATED WITH ZINC CHROMATE PRIMER AND FIELD COATED WITH ONE COAT OF COMPATIBLE BLACK ENAMEL.

No.	Date	By	Revision

CHARLOTTE-MECKLENBURG UTILITY DEPARTMENT
ENGINEERING DIVISION
CHARLOTTE, NORTH CAROLINA

Job No. ____ File No. ____
Scales
PLAN NO SCALE
PROFILE
Hor. ____
Vert. ____
As Built ____ Date ____

STANDARD DETAIL WATER

FRAME AND COVER 5' X 5' METER VAULT

Surveyed By	Designed By	Drawn By	Project-Engr	Approved By	Date	Sheet	Of
		JRM		RD Moody	2/01	25	

SDW25.DWG
12/03/99