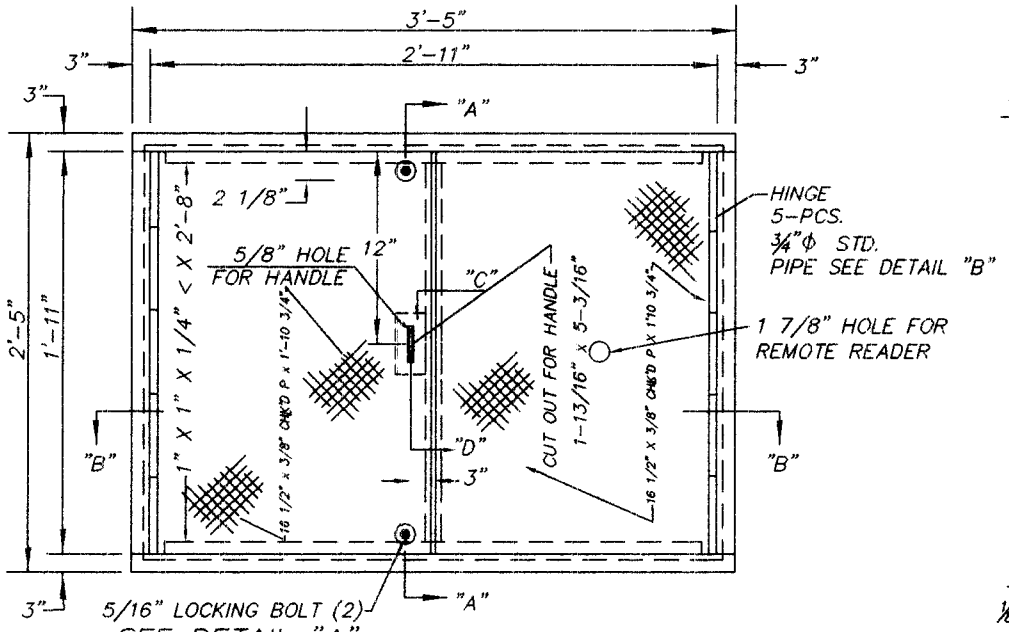

PLAN

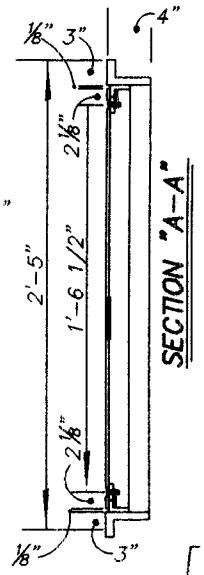

SECTION "A-A"

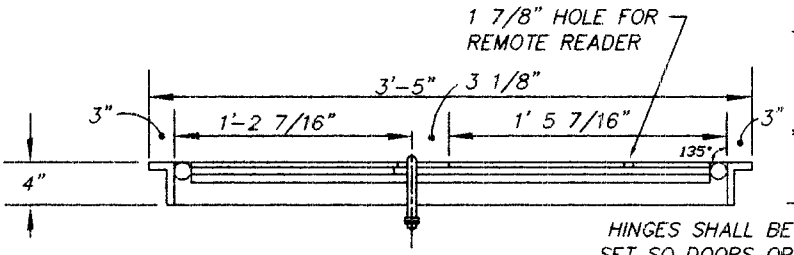

SECTION "B-B"

HINGES SHALL BE SET SO DOORS OPEN 45° BEYOND VERTICAL

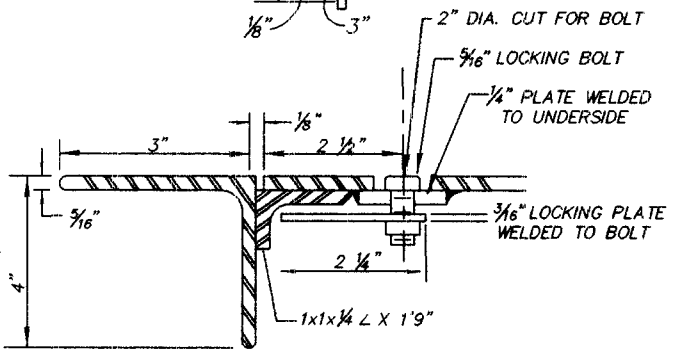

DETAIL "A" – LOCKING BOLT (2)

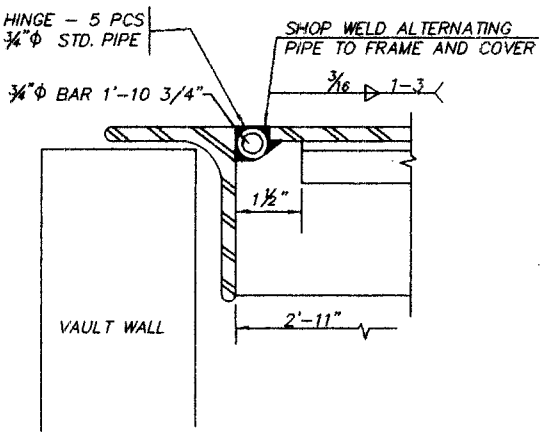

DETAIL "B" HINGE

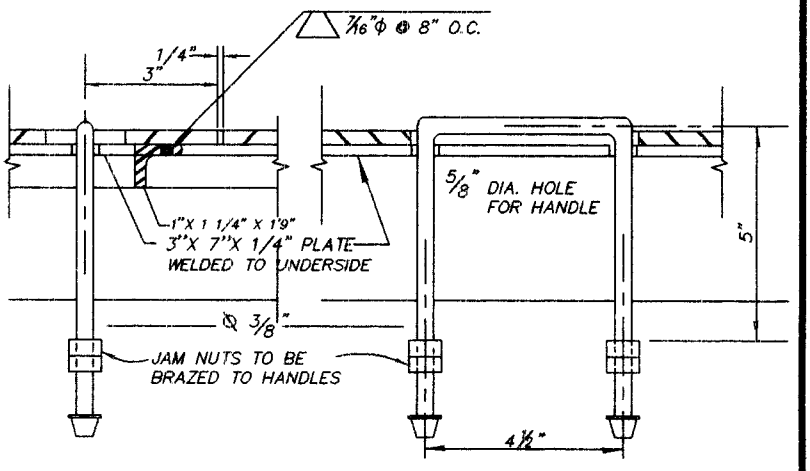

DETAIL "C" HANDLE (1)

DETAIL "D" HANDLE

NOTES:

SERVICE NUMBER TO BE BEAD WELDED ON FRAME IN 2 1/2" LETTERS.

FRAME AND COVER TO BE SHOP COATED WITH ZINC CHROMATE PRIMER AND FIELD COATED WITH ONE COAT OF COMPATIBLE BLACK ENAMEL.

FRAME DIMENSIONS SHALL ALLOW FOR CLOSE FIT INSIDE VAULT AS SHOWN AT TOP OF VAULT WALLS.

CHARLOTTE–MECKLENBURG UTILITY DEPARTMENT
ENGINEERING DIVISION
CHARLOTTE, NORTH CAROLINA

Job No. / File No.	STANDARD DETAIL WATER
Scales: PLAN NO SCALE; PROFILE Hor. / Vert.	FRAME AND COVER 2'x3' METER VAULT
As Built / Date	
Surveyed By / Designed By / Drawn By: JRM / Project-Engr / Approved By: RD Moody / Date: 2/01	Sheet 21 Of

No.	Date	By	Revision

SDW21.DWG
12/03/99