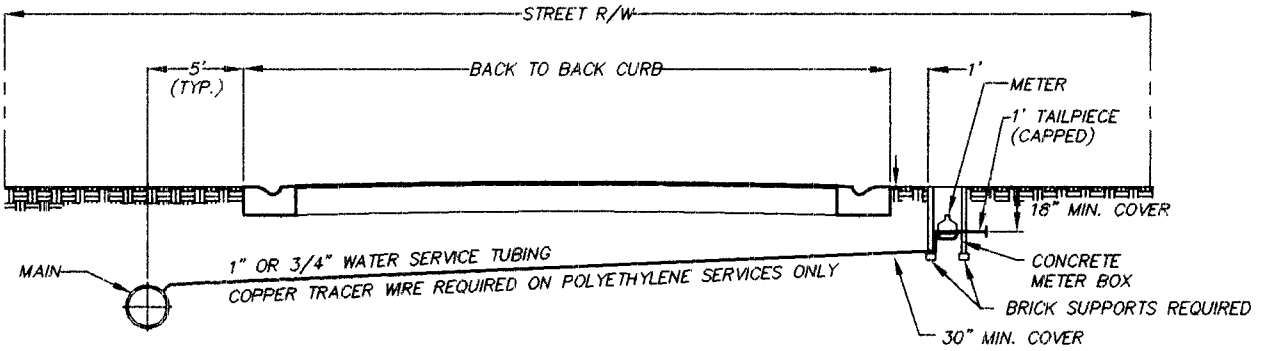

1" OR 3/4" SERVICE CONNECTION

(LONG SIDE)

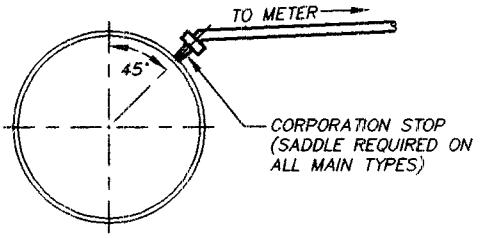

DETAIL AT MAIN

(LONG SIDE)

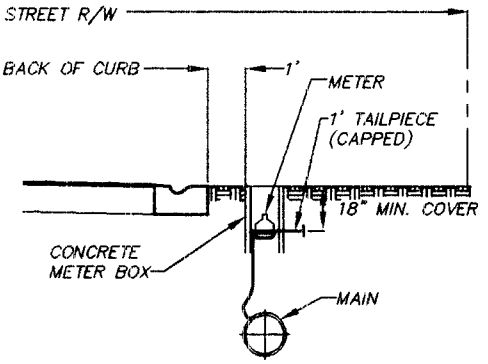

1" OR 3/4" SERVICE CONNECTION

(SHORT SIDE)

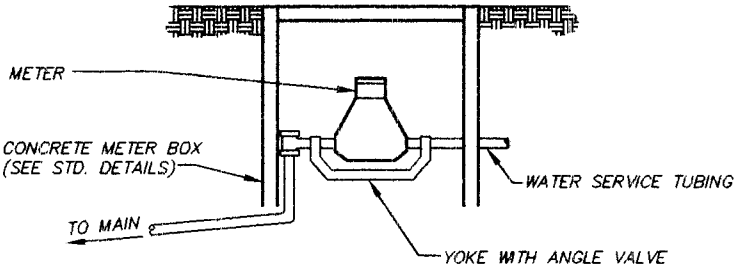

DETAIL AT METER

(LONG SIDE)

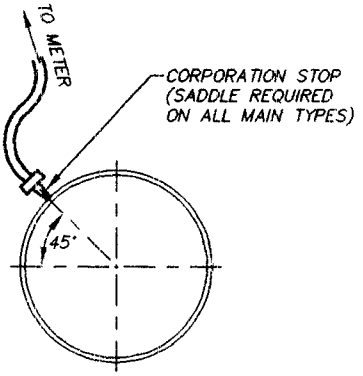

DETAIL AT MAIN

(SHORT SIDE)

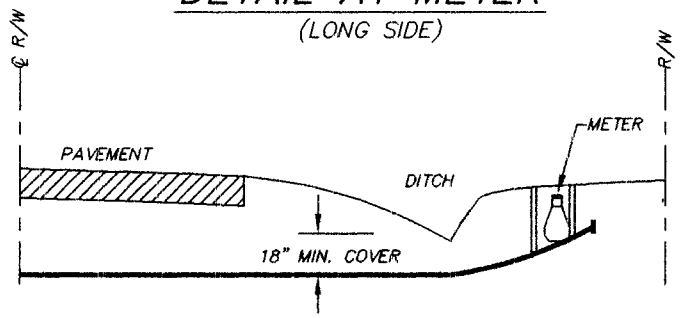

ROAD WITH SIDE DITCH

NOTE:
MIN. DISTANCE CENTER TO CENTER ON SERVICES OR TO BELLS OR SPIGOTS SHALL BE 3'-0" AS MEASURED ALONG THE MAIN.

No.	Date	By	Revision

CHARLOTTE–MECKLENBURG UTILITY DEPARTMENT
ENGINEERING DIVISION
CHARLOTTE, NORTH CAROLINA

Job No. ____ File No. ____
Scales
PLAN NTS
PROFILE Hor. ____ Vert. ____
As Built ____ Date ____

STANDARD DETAIL WATER

3/4" AND 1" WATER SERVICE CONNECTION

Surveyed By	Designed By	Drawn By	Project-Engr	Approved By	Date	Sheet	Of
		KHP		RD Moody	2/01	17	

SDW17.DWG
12/09/99