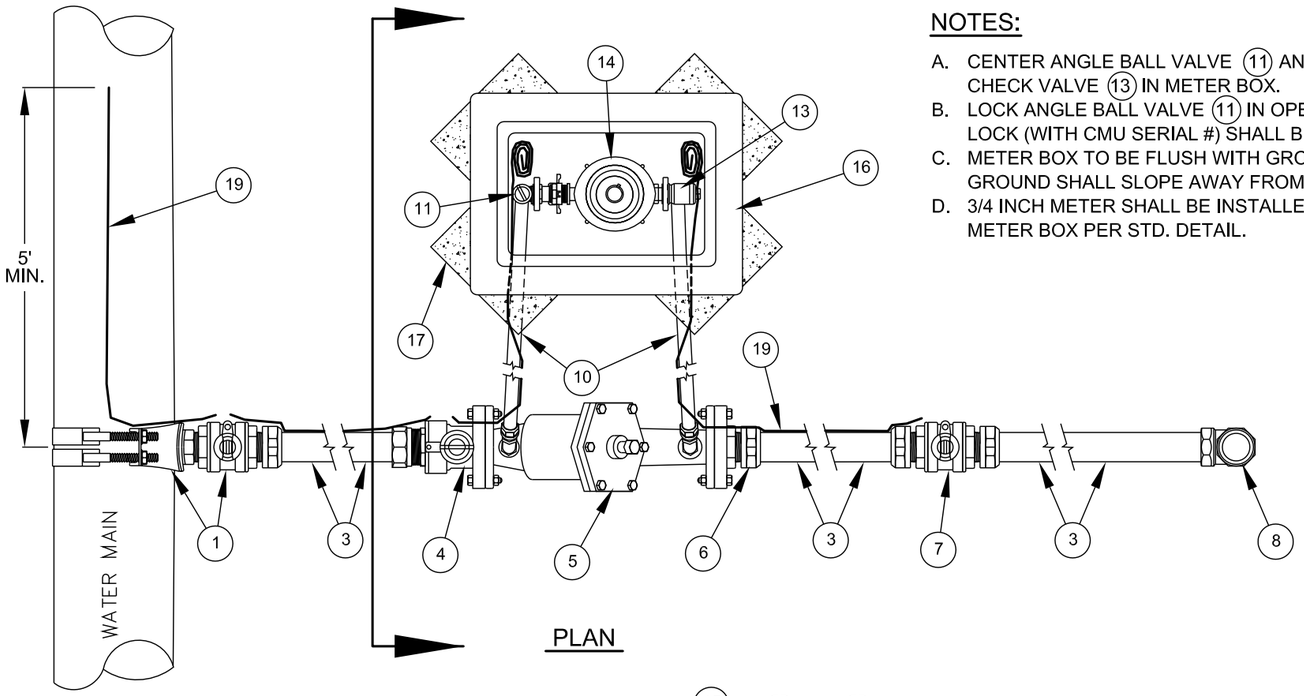

NOTES:

A. CENTER ANGLE BALL VALVE (11) AND SINGLE ANGLE CHECK VALVE (13) IN METER BOX.
B. LOCK ANGLE BALL VALVE (11) IN OPEN POSITION. PERMANANT LOCK (WITH CMU SERIAL #) SHALL BE FURNISHED BY CMU.
C. METER BOX TO BE FLUSH WITH GROUND OR CONCRETE SIDEWALK, GROUND SHALL SLOPE AWAY FROM METER BOX.
D. 3/4 INCH METER SHALL BE INSTALLED IN STANDARD CONCRETE METER BOX PER STD. DETAIL.

NO.	DESCRIPTION
1	TAPPING SADDLE & BALL CORPORATION STOP (CC THREAD x CTS COMPRESSION)
2	STANDARD VALVE BOX ASSEMBLY (TYP) - ALL VALVES (OMIT AT CORPORATION STOP ON SHORT SIDE SERVICE).
3	TYPE K COPPER TUBING OR HDPE (POLY) TUBING SDR 9 (WITH INSERT STIFFENERS)
4	BALL STRAIGHT METER VALVE - (2 BOLT METER FL x CTS COMPRESSION), MUELLER #B-24355 OR APPROVED EQUAL.
5	DETECTOR CHECK VALVE - (2 BOLT METER FL x 2 BOLT METER FL), FEBCO SERIES 406, OR APPROVED EQUAL.
6	STRAIGHT METER COUPLING - (2 BOLT METER FL x CTS COMPRESSION), FORD #CF34, OR APPROVED EQUAL.
7	PROPERTY LINE BALL CURB VALVE - (ALL CTS COMPRESSION), MUELLER #B-25209, FORD #B44-777, OR APPROVED EQUAL.
8	TEMPORARY 2" BLOW-OFF ASSEMBLY - GALV. STEEL PIPE WITH THREADED COUPLING.
9	3/4 INCH 45° COUPLING (MIP TREAD x CTS COMPRESSION), MUELLER #H15529, OR APPROVED EQUAL.
10	3/4 INCH TYPE K COPPER OR HDPE (POLY TUBING) SDR 9.
11	3/4 INCH ANGLE BALL VALVE WITH LOCK WINGS (LOCK OPEN) (CTS COMPRESSION x YOKE STAR NUT)
12	3/4 INCH METER YOKE BAR
13	3/4 INCH SINGLE ANGLE CHECK VALVE (YOKE STAR NUT x CTS COMPRESSION)
14	3/4 INCH METER ASSEMBLY WITH AMR ERT TRANSMITTER (BY CMU)
15	SOLID POLYETHYLENE (HDPE) METER BOX LID
16	STANDARD 3/4 INCH CONCRETE METER BOX PER STANDARD DETAIL
17	SOLID STANDARD CONCRETE BRICKS - DIAGONAL AT CORNERS - 4 EACH
18	90 ° BEND (CTS COMPRESSION x FNPT)
19	AWG #12 GAUGE COPPER TRACER WIRE (THWN) WITH BLUE INSULATION, TERMINATE WITH 24 INCH EXCESS WIRE (COILED) AT METER BOX AND VALVE BOX (TYP) - OMIT WHEN SERVICE LINE IS ALL COPPER TUBING.

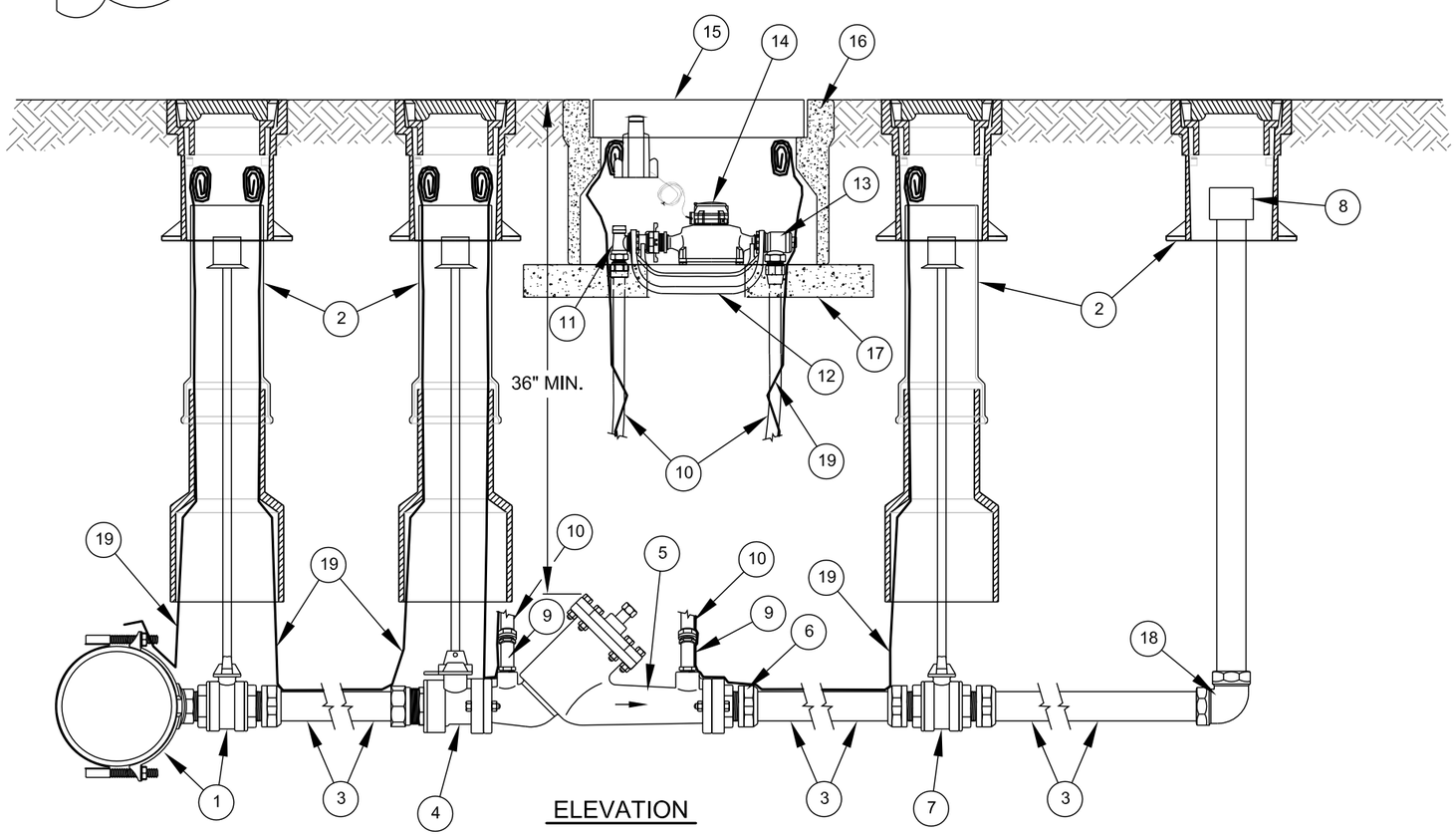

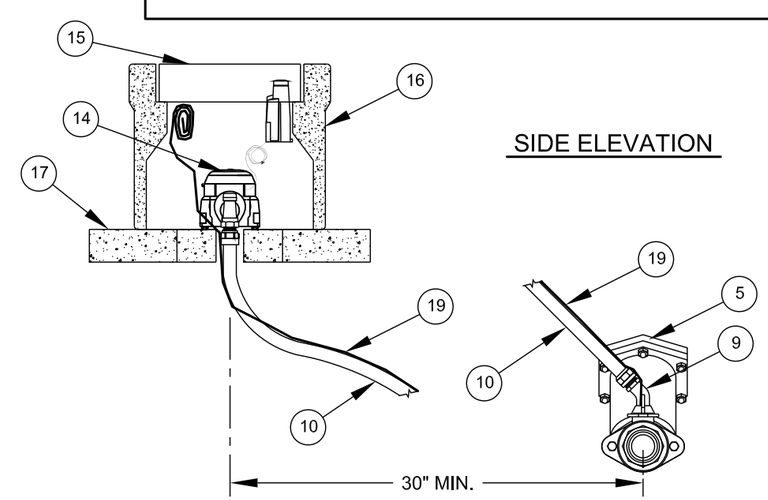

NO SCALE

STANDARD NO. H

VERSION NO. 1.0

VERSION DATE 01.27.2010

2" FIRE LINE SPRINKLER SERVICE WITH DETECTOR METER ASSEMBLY

CHARLOTTE-MECKLENBURG UTILITIES

STANDARD DETAILS

WATER

CHARLOTTE