5.0 Outlet Structures

5.1 Symbols and Definitions

To provide consistency within this chapter as well as throughout this Manual, the symbols listed in Table 5-1 will be used. These symbols were selected because of their wide use in technical publications. In some cases, the same symbol is used in existing publications for more than one definition. Where this occurs, the symbol will be defined where it occurs in the text or equation.

Table 5-1 Symbols and Definition

Symbol	Definition	Units
A, a	Cross sectional or surface area	ft^2
A_m	Drainage area	mi^2
b	Breadth of weir	ft
C	Weir or discharge coefficient	-
D	Distance or change in elevation	ft
D	Depth of basin or diameter of orifice or pipe	ft
E	Separation wall thickness	ft
g	Acceleration due to gravity	ft/s^2
H	Head on structure	ft
K, k	Coefficient or shape factor	-
L	Length	ft
n	Manning's n	-
P	Height of the weir	ft
Q, q	Peak inflow or outflow rate	cfs, in
R	Radius of the upstream corner of the weir	ft
T	Thickness of the wall	ft
V_u	Approach velocity	ft/s
WQ_v	Water quality protection volume	ac ft
W	Maximum cross sectional bar width facing the flow	in
X	Minimum clear spacing between bars	in
Θ	Angle of v-notch	degrees
Θ_g	Angle of the grate with respect to the horizontal	degrees

5.2 Outlet Configurations

5.2.1 Introduction

Outlet structures meter water through the facility at a controlled rate. There are many types and combinations of outlet structures. Most of these outlet structures consist of a combination of weirs and orifices in conjunction with outlet pipes or conduits. Discussion and appropriate computational methods for the majority of the individual elements of these outlet structure combinations are provided in the Charlotte-Mecklenburg Storm Water Design Manual.

For outlet design, a stage-discharge curve is developed for the full range of flows that the structure would experience. For multistage control structures a composite stage-discharge curve will be needed to include all outlets that will be used to control different design storms and limit outflow to different detention times.

This section provides an overview of outlet structure hydraulics and design for storm water management facilities for outlet types that are not covered by the Charlotte-Mecklenburg Storm Water Design Manual

and that may be used with the design of BMPs.

5.2.2 Multiple Orifices

Flow through multiple orifices, such as the perforated plate shown in Figure 5-1(c), can be computed by summing the flow through individual orifices. For multiple orifices of the same size and under the influence of the same effective head, the total flow can be determined by multiplying the discharge for a single orifice by the number of openings.

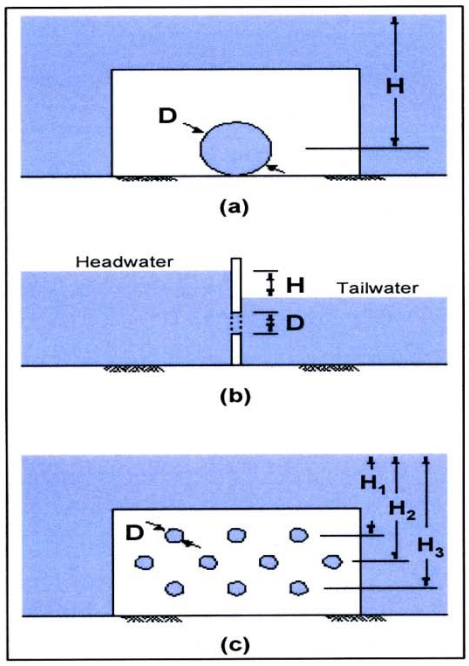

Figure 5-1 Orifice Definitions

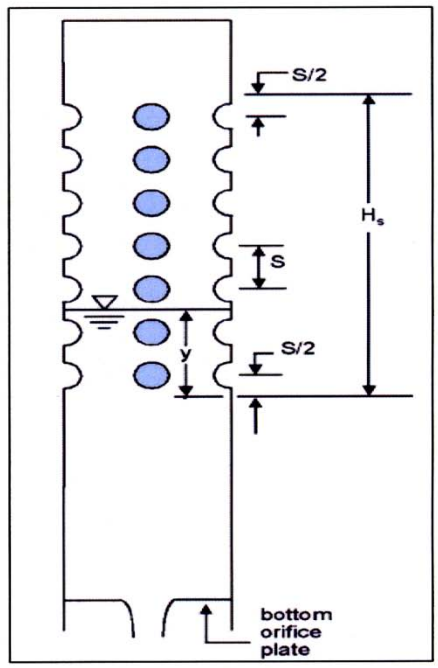

Figure 5-2 Perforated Riser

5.2.3 Perforated Risers

A special kind of orifice flow is a perforated riser as illustrated in Figure 5-2. In a perforated riser, an orifice plate at the bottom of the riser, or in the outlet pipe just downstream from the elbow at the bottom of the riser, controls the flow. It is important that the perforations in the riser convey more flow than the orifice plate so as not to become the control. The key role of the riser perforations is to reduce the clogging potential of the controlling orifice.

Referring to Figure 5-2, a shortcut formula has been developed to estimate the total flow capacity of the perforated section (McEnroe, 1988):

$$\mathbf{Q = C_p \frac{2A_p}{3H_s}\sqrt{2g}H^{3/2}} \qquad \textbf{(5.1)}$$

Where: Q = discharge (cfs)
C_p = discharge coefficient for perforations (normally 0.61)
A_p = cross-sectional area of all the holes (ft^2)
H_s = distance from S/2 below the lowest row of holes to S/2 above the top row (ft)

5.2.4 Pipes and Culverts

Discharge pipes are often used as outlet structures for storm water control facilities. The design of these pipes can be for either single or multi-stage discharges. A reverse-slope underwater pipe is often used for water quality or channel protection outlets.

Reverse slope pipes may be analyzed as a submerged orifice as long as the H/D ratio is greater than 1.5. For low flow conditions when the flow reaches and begins to overflow the pipe, weir flow controls. As the stage increases the flow will transition to orifice flow.

Outlet barrels should be at least 12 inches in diameter and analyzed as discharge pipes with headwater and tailwater effects taken into account. The outlet hydraulics for pipe flow can be determined from the outlet control culvert nomographs and procedures given in Chapter 6, Design of Culverts, in the Charlotte Mecklenburg Storm Water Design Manual.

5.2.5 Side-Channel Weirs

Side channel weirs can be located along curb and gutter with the spillway crest parallel to the alignment of the gutter. As the water level in the gutter rises above the crest the excess is diverted into the side channel. This type of structure works well in urban settings for flood diversions, skimming surface waters or pollution from runoff or for detention ponds located along channels.

While the flow from a side weir is very complex and dependent on a large number of factors, according to the USBR (1978), for normal purposes where flow is relatively tranquil, a standard weir equation with discharge coefficient will suffice. The exit channel must be set to allow for free flow over the weir without submergence. Overtopping of the weir walls should be prevented with freeboard. In closed conduit situations or open channels with faster flows, the complexities of side-channel weir design must be dealt with. The water surface profile encountered along the lateral side weir is varying as is the discharge over the weir.

Metcalf and Eddy (1972) provide a description of the three types of situations encountered in side-channel weir design. Figure 5-3 shows possible water surface profiles for: (a) steeply sloping supercritical flow situation, (b) subcritical flow situation with the crest elevation above critical depth, and (c) subcritical flow situation with the crest elevation below critical depth. In Figure 5-3, a and c illustrate when the water surface is falling along the axis of the weir crest. In b it is actually rising, if small amounts of water are withdrawn. If the ratio of the height of the weir to the specific energy is less than about 0.6, a falling water surface profile is likely (Metcalf & Eddy, 1972). Approximate solutions for the falling water surface profile and rising water surface profile respectively are:

$$Q_w = 0.67\ L^{0.72}\ E_w^{1.645} \quad \textbf{(falling water surface profile)} \qquad (5.2)$$

$$Q_w = 3.32\ L^{0.83}\ E_w^{1.67} \quad \textbf{(rising water surface profile)} \qquad (5.3)$$

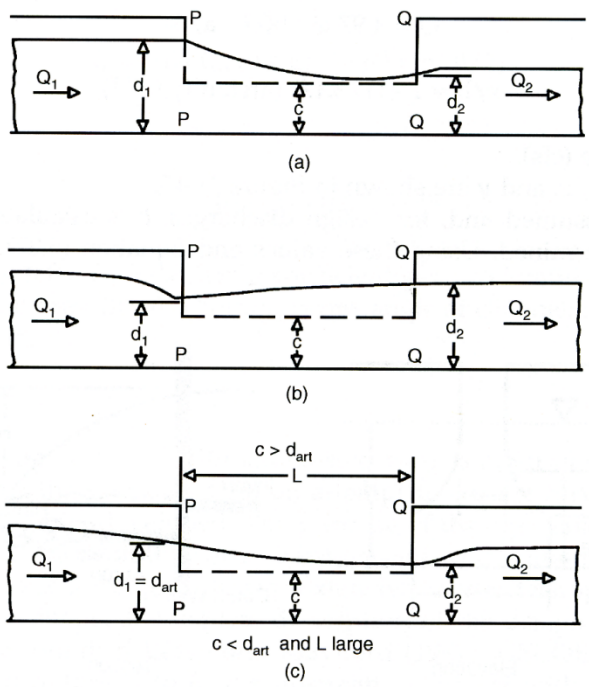

Figure 5-3 Side-Channel Weir Water Surface Profiles

(Source: Metcalf & Eddy, 1972)

Based on the work of Akers (1957), Metcalf & Eddy (1972), De Marchi (1934) and Uyumaz and Smith (1991) the following design procedure can be used with the assumption that specific energy is constant along the weir (found to be true within ±3 percent).

The variables used in the following design procedure are:

B,D = channel width or diameter, ft
c,p = height of weir above channel, ft
m = discharge coefficient of weir
$h_{1,2}$ = up- and downstream heads on the weir, ft
D = hydraulic depth, cross sectional area/free surface width, ft
$d_{1,2}$ = depths of flow up- and downstream, ft
E = specific energy relative to the channel bottom, ft
E_w = specific energy relative to the weir crest elevation, ft
$F_{1,2}$ = up- and downstream Froude numbers at ends of weir
L = length of weir, ft
$L_{1,2}$ = length of weir in rising water surface case, ft
n_2 = ratio of h_1/h_2
$Q_{1,2}$ = discharge up- and downstream, cfs
$V_{1,2}$ = velocity up- and downstream, ft/s
$y_{1,2}$ = flow depths up- and downstream ends of weir, ft
$\alpha_{1,2}$ = velocity coefficient up- and downstream
α' = pressure-head correction
θ = channel slope angle
Φ = varied flow function

The normal situation is to have an existing or designed channel with a known flow and a desired reduction in that flow, or flow level, to achieve some goal. The side weir is then designed to remove the desired amount of flow from the channel when it is flowing at the design flow.

1. Calculate the upstream depth, velocity, and flow type.

   - Upstream depth is calculated from the known flow and flow geometry using the Manning equation.
   - Upstream velocity is calculated from the known flow and flow geometry using the Manning equation.
   - Calculate the upstream Froude number. According to Metcalf & Eddy (1972) **α** may be taken as 1.2 upstream and 1.4 downstream.

     $$F_1 = V_1 / (gD_1 \cos\theta/\alpha_1)^{1/2} \quad (5.4)$$

   - If the Froude number is greater than 1 the flow is supercritical (upper profile in Figure 5-3). If it is less than 1 the flow is subcritical (the lower two water surface profiles in Figure 5-3).

2. Compute critical depth in the channel and set the trial weir height.

   - By setting the Froude number equal to 1 in equation 5.4, critical depth (D_1) is determined.
   - Set the weir height above the channel bottom. For subcritical flow, if the weir height is set above critical depth the water surface will be rising. By setting the weir height below critical depth the water surface will be falling. For supercritical flow the water surface will be falling. Another check is given by Metcalf & Eddy (1972), if the ratio of the weir height to the specific energy is less than about 0.6 the water surface is falling.
   - Note that there may be a number of factors which go into setting the weir height including: low flow maintenance restrictions, physical geometry of the channel, need for tail channel slope or free outfall, need to minimize weir length, etc.

3. Compute the specific energy.

   - The specific energy relative to the weir crest elevation may be computed as (α′ is taken as 1.0 upstream and 0.95 downstream):

     $$E_w = \alpha(V^2/2g) + \alpha'(d-c) \quad (5.5)$$

   - The head on the weir is defined as the depth of flow minus the weir height in feet.

4. Find the weir length.

   - Compute c/E_w
   - Find the weir length from (Akers, 1957):

     $$L = 2.03\ B\ (5.28 - 2.63\ c/E_w) \quad (5.6)$$

   - Note: In this equation the ratio of the up- and downstream heads on the weir is set to 10.0.

5. Check length for flow target (optional).

   - Solve for the downstream head on the weir. The flow goes through critical depth at the upstream end. At critical flow.

$$\alpha V_1^2/2g = \alpha' h_1/2 \quad (5.7)$$

- Then the specific energy is:

$$E_w = \alpha' h_1/2 + \alpha' h_1 \quad (5.8)$$

$$h_1 = E_w/(1.5\,\alpha') \text{ and } h_2 = 0.1h_1 \quad (5.9)$$

- Substitute h_2 into the specific energy equation to find V_2.
- From the continuity equation Q = VA find Q_2 and compare it to the target.
- For the rising water case the determination of weir length and flow over the weir is handled in a different way. The problem becomes one of calculating the channel discharge at the beginning and ending of an assumed weir length, the difference being the discharge over the side weir. Knowing conditions at section 1 (Q, y_1), Φ_2 then Q_2 can be found. Alternately a Q_2 value can be set and the L value determined. See Chow (1959), Metcalf & Eddy (1972), for more details. The general equations are:

$$L_{1,2} = 3/2\ B/m\ (\Phi_2 - \Phi_1) \quad (5.10)$$

$$\Phi = [(2E - 3c)/(E - c)](E - y)/(y - c)]^{0.5} - 3\sin^{-1}[(E-y)/(E-c)]^{0.5} \quad (5.11)$$

- The discharge coefficient is given as:

for rectangular channels $F_1 < 1$

$$m = [(2/3)0.611][1 - (3F_1^2/F_1^2+2)]^{0.5} \quad (5.12)$$

- for rectangular channels $F_1 > 2$

$$m = 2/3\ (0.036 - 0.008\ F_1) \quad (5.13)$$

- Discharge coefficients for other types of channels and weirs should be taken from the technical literature.

Because the side-channel weir is more complex for design applications the following example is given to aid the designer in applying the above procedure.

Example Design Of Side-Channel Weir

A rectangular channel is 10 feet wide and flows 5 feet deep. The slope is 0.001 and Manning's n is taken as 0.014. A side channel weir is desired to reduce the depth to about 3.7 feet.

- From the Manning equation the upstream normal depth flow characteristics are:

Q_1 = 310 cfs V_1 = 6.20 ft/s

- The desired flow characteristics downstream from the weir are:

Q_2 = 206 cfs V_2 = 5.56 ft/s

Using Equation 5.4 with cos ϴ = 1, the Froude number in the approaching flow is:

$$F = V_1/(gD\cos\theta/\alpha_1)^{1/2} = (6.20)/[(32.2 * 5 * 1)/1.2]^{1/2} = 0.535 \text{ (subcritical)}$$

- At critical depth F = 1 and Q = VA then:

$$F = 1 = Q/(B\ D_c^{3/2}\ g^{1/2}) = 310/(10 * D_c^{3/2} * 32.2^{1/2}) \text{ therefore, } D_c = 3.1 \text{ ft}$$

- Set weir height below critical depth (after several trials it is set at 1.2 ft)

- Specific energy with α ′ = to 1, is:

$$E_w = \alpha(V^2/2g) + \alpha'\ (d\text{-}c) = 1.2\ (6.2^2)/(2 * 32.2) + 1(5\text{-}1.2) = 4.516 \text{ ft}$$

With weir height c = 1.2

$c/E_w = 1.2/4.516 = 0.266$ (falling water surface profile)

- Weir length is calculated as:

$$L = 2.03\ B\ (5.28 - 2.63\ c/E_w) = 2.03*10 * (5.28 - 2.63*0.266) = 93 \text{ ft}$$

- Checking flow target, h_1 is at critical flow upstream where depth equals twice the velocity head and substituting into the specific energy equation for the velocity head:

$h_2 = 0.1\ h_1 = 0.1\ E_w/1.5\ \alpha' = [(0.1)(4.516)]/[1.5(1)] = 0.301$ ft

$E_w = \alpha(V^2/2g) + \alpha'(h_2) = 1.4\ (V_2^2)/(2*32.2)+(0.95*0.301) = 4.516$ ft

$V_2 = 13.95$ ft/s

$y_2 = h_2 + c = 0.301 + 1.2 = 1.501$ ft

$Q_2 = AV = (10)(1.501)(13.95) = 209$ cfs. OK

5.2.6 Multistage Outlet Structures

A combination outlet such as a multiple orifice plate system or multistage riser is often used to provide hydraulic outlet controls for the different design requirements (e.g., water quality, channel protection, and flood protection) for storm water management facilities. Separate openings or devices at different elevations are used to control the rate of discharge from a facility during multiple design storms. Many iterative routings are usually required to arrive at a minimum structure size and storage volume that provides proper control. The use of a combination outlet requires the construction of a composite stage-discharge curve (as shown in Figure 5-5) suitable for control of multiple storm flows. Below are the steps for designing a multistage outlet. Control of storage volumes for water quality, channel protection, and flood control are included in the following steps.

Step 1: **Determine storm water control volumes –** Using the procedures from Chapter 3 – Hydrology in this manual, estimate the required storage volumes for water quality treatment (WQ_v), channel protection volume (CP_v), and flood control storms as appropriate.

Step 2: **Develop stage-storage curve –** Using the site geometry and topography, develop the stage-storage curve for the facility in order to provide sufficient storage for the control volumes involved in the design.

Step 3: **Estimate water quality outlet –** Using either Method 1 or Method 2 outlined in Section 5.3, estimate the water quality control outlet size. If a permanent pool is incorporated into the design, the outlet can be protected using a reverse slope pipe, a hooded protection device, or another acceptable method.

Step 4: **Estimate channel protection volume outlet –** Using either Method 1 or Method 2 from

Section 5.3, estimate the channel protection volume outlet size. For this design, the storage needed for channel protection volume will be stacked on top of the water quality volume storage elevation determined in Step 3. The total stage-discharge rating curve at this point will include water quality control orifice and the outlet used for channel protection volume. The outlet should be protected from clogging in a manner similar to that for the water quality orifice.

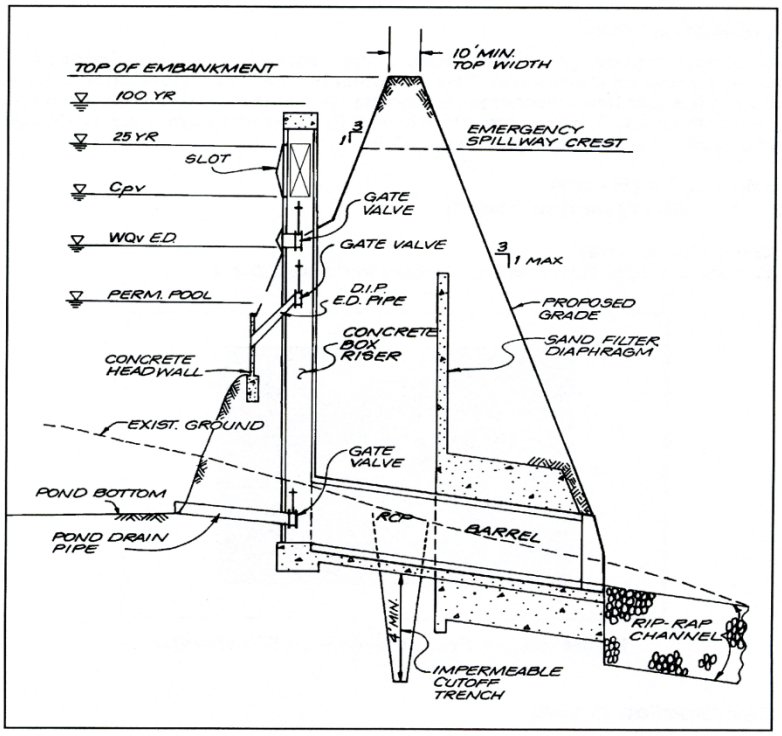

Figure 5-4 Schematic of Combination Outlet Structure

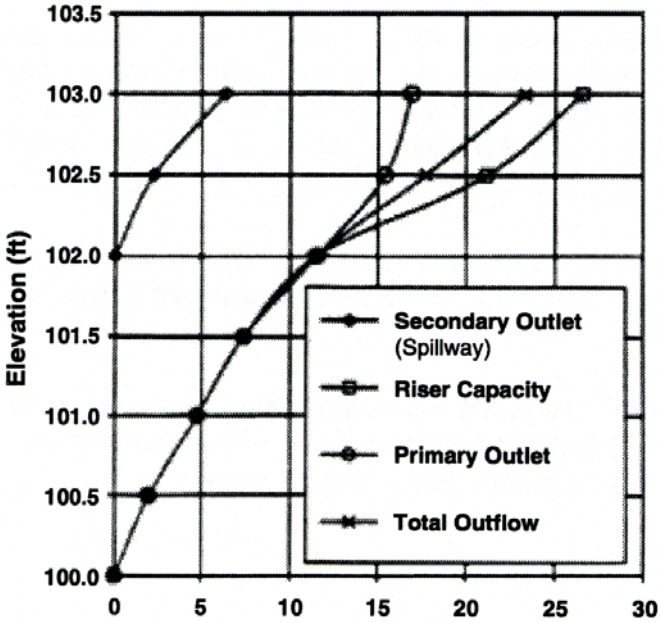

Figure 5-5 Composite Stage-Discharge Curve

Step 5: **Estimate flood protection outlet –** The flood protection volume typically includes the water quality and channel protection storage and requires additional storage above these two volumes. Estimate the maximum water surface elevation for the appropriate flood control design storms using the stage-storage curve. Select an outlet type and calculate the initial size and geometry based upon maintaining the pre-development peak discharge rate for the design storms required. Develop a stage-discharge curve for the combined set of outlets.

Step 6: **Check performance of the outlet structure –** Perform a hydraulic analysis of the multistage outlet structure using reservoir routing to ensure that all outlets will function as designed. Several iterations may be required to calibrate and optimize the hydraulics and outlets that are used. For all storage BMPs, the storage volume must be shown to contain 5 percent of the runoff volume at the design duration after the center of the rainfall. For example, for the CP_v design, the 1-year, 24-hour storm event must be held for 24 hours (48 hours in Charlotte). Therefore, the design should compute the amount of runoff volume that is left within the storage volume at 36 hours (or 60 hours for Charlotte), 24 hours (or 48 hours in Charlotte) after the center of the rainfall, 12 hours for a 24-hour storm). This volume must be at least 5 percent of the total runoff volume.

The hydraulic analysis of the design must take into account the hydraulic changes that will occur as depth of storage changes for the different design storms. As shown in Figure 5-6, as the water passes over the rim of a riser, the riser acts as a weir. However, when the water surface reaches a certain height over the rim of a riser, the riser will begin to act as a submerged orifice. The designer must compute the elevation at which this transition from riser weir flow control to riser orifice flow control takes place for an outlet where this transition will occur. Also note in Figure 5-6 that as the elevation of the water increases further, the control can change from barrel inlet flow control to barrel pipe flow control. Figure 5-7 shows another condition where weir flow can change to orifice flow, which must be taken into account in the hydraulics of the rating curve as different design conditions results in changing water surface elevations.

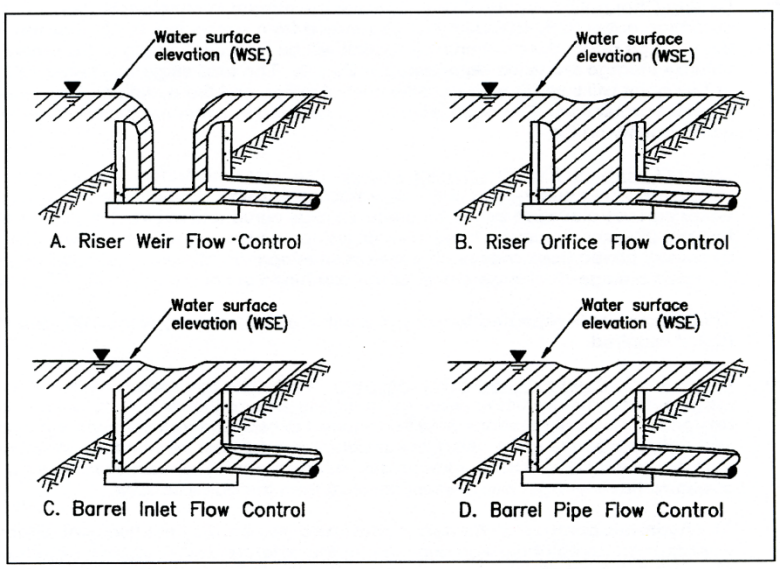

Figure 5-6 Riser Flow Diagrams
(Source: VDCR, 1999)

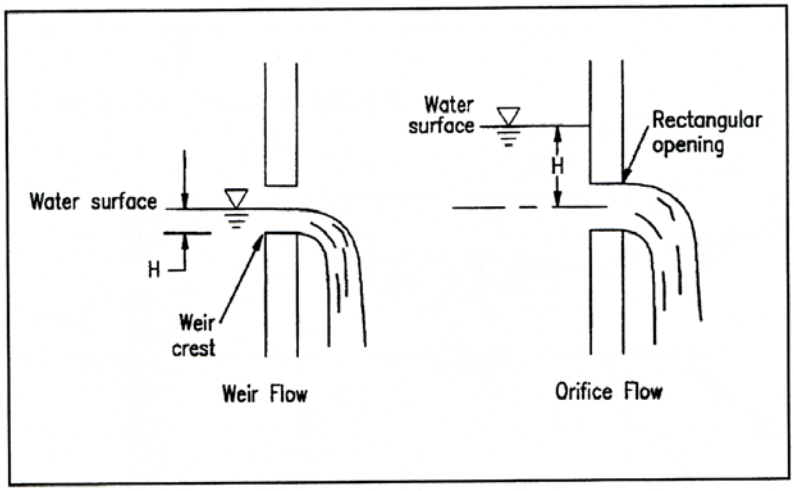

Figure 5-7 Weir and Orifice Flow
(Source: VDCR, 1999)

Step 7: **Size the emergency spillway –** It is recommended that all storm water impoundment structures have an emergency spillway. An emergency spillway provides a degree of safety to prevent overtopping of an embankment if the primary outlet or principal spillway should become clogged or otherwise inoperative. The 50-year storm should be routed through the outlet devices and emergency spillway to ensure the hydraulics of the system will operate as designed. A minimum of 6" of freeboard must be provided above the 50-year peak water surface elevation.

Step 8: **Design outlet protection –** Design necessary outlet protection and energy dissipation facilities to avoid erosion problems downstream from outlet devices and emergency spillway(s). See Section 5.6 and Chapter 8 in the Charlotte-Mecklenburg Storm Water Design Manual for the design of energy dissipators.

Step 9: **Perform buoyancy calculations –** Perform buoyancy calculations for the outlet structure and footing. Flotation will occur when the weight of the structure is less than or equal to the buoyant force exerted by the water. Appropriate safety factors should be included when doing these calculations.

Step 10: **Provide seepage control –** Seepage control should be provided for the outflow pipe or culvert through an embankment. The two most common devices for controlling seepage are (1) filter and drainage diaphragms and (2) antiseep collars.

5.3 Extended Detention Outlet Design Methods

5.3.1 Introduction

Extended detention orifice sizing is required in design applications that provide extended detention for downstream channel protection volume or the extended detention portion of the water quality protection volume. In both cases an extended detention orifice or reverse slope pipe can be used for the outlet. For a structural storm water BMP providing both water quality (WQ_v), extended detention and channel protection (CP_v) control, there may be a need to design two outlet orifices – one for the water quality control outlet and one for the channel protection outlet. In some cases, one orifice can provide the control for both of these design storms.

The design of outlet hydraulics for peak control design (flood control) is usually straightforward in that an outlet is selected to limit the peak flow from developed land use conditions to the peak flow for pre-developed land use conditions. Since volume and the time required for water to exit the storage facility are not usually considered, the outlet design can easily be calculated and routing procedures used to determine if quantity design criteria are met.

The extended detention outlet can be estimated using either of the following methods:

(1) Use the maximum hydraulic head associated with the storage volume and maximum flow, and calculate the orifice size needed to achieve the required drawdown time, and route the volume through the basin to verify the actual storage volume used and the drawdown time. A minimum of 5 percent of the design storm runoff volume must remain within the storage volume at the time duration after the center of the design storm rainfall.

(2) Approximate the orifice size using the average hydraulic head associated with the storage volume and the required drawdown time, and route the volume through the basin to verify the actual storage volume used and the drawdown time. A minimum of 5 percent of the design storm runoff volume must remain within the storage volume at the time duration after the center of the design storm rainfall.

These two procedures are outlined in the examples below and can be used to estimate an extended detention orifice for water quality and/or the control of the channel protection volume.

5.3.2 Method 1: Maximum Hydraulic Head

A wet extended detention pond sized for the required water quality protection volume will be used here to illustrate the sizing procedure for an extended-detention orifice.

Given the following information, estimate the required orifice size for water quality protection design.

Given: Water Quality Protection Volume (WQ_v) = 0.76 ac ft = 33,106 ft^3
Maximum Hydraulic Head (H_{max}) = 5.0 ft (from, stage vs. storage data)

Step 1 Determine the maximum discharge resulting from the 24-hour drawdown requirement (use 48 hours for Charlotte). It is calculated by dividing the Water Quality Protection Volume (or Channel Protection Volume) by the required time to find the average discharge, and then multiplying by two to obtain the maximum discharge. Although multiplying by 2 may seem arbitrary, this has been found to give a reasonable estimate of the maximum discharge. Remember that this will be verified by the routing calculations.

Q_{avg} = 33,106 ft^3 / (24 hr)(3,600 s/hr) = 0.38 cfs
$Q_{max} = 2 * Q_{avg} = 2 * 0.38 = 0.76$ cfs

Step 2 Determine the required orifice diameter by using the orifice equation (5.1) and Q_{max} and H_{max}:

$Q = CA(2gH)^{0.5}$, or $A = Q / C(2gH)^{0.5}$
$A = 0.76 / 0.6[(2)(32.2)(5.0)]^{0.5} = 0.071$ ft^3

Determine pipe diameter from $A = 3.14d^2/4$. then $d = (4A/3.14)^{0.5}$
$D = [4(0.071)/3.14]^{0.5} = 0.30$ ft = 3.61 in

Therefore, use a 3.6-inch diameter water quality protection orifice.

Routing the water quality protection volume of 0.76 ac ft through the 3.6-inch water quality protection orifice will allow the designer to verify the drawdown time, as well as the maximum hydraulic head

elevation. The routing effect may result in less than 5 percent of the runoff volume being in the storage volume at the design duration. If the volume is less than the 5 percent, then the orifice size should be reduced or storage volume increased to achieve the required 5 percent to provide adequate pollutant removal.

5.3.3 Method 2: Average Hydraulic Head and Average Discharge

Using the data from the previous example, Method 2 is used to estimate the size of the outlet orifice.

Given: Water Quality Protection Volume (WQ_v) = 0.76 ac ft = 33,106 ft^3
Average Hydraulic Head (H_{avg}) = 2.5 ft (from stage vs. storage data)

Step 1 Determine the average release rate to release the water quality protection volume over a 24-hour time period (48 hours for Charlotte).

Q_{avg} = 33,106 ft^3 / (24 hr)(3,600 s/hr) = 0.38 cfs

Step 2 Estimate the required orifice diameter by using the orifice equation and the average head on the orifice:

$Q = CA(2gH)^{0.5}$, or $A = Q / C(2gH)^{0.5}$
$A = 0.38 / 0.6[(2)(32.2)(2.5)]^{0.5} = 0.05\ ft^3$

Determine pipe diameter from $A = 3.14r^2 = 3.14d^2/4$, then $d = (4A/3.14)^{0.5}$
$D = [4(0.05)/3.14]^{0.5} = 0.252$ ft = 3.03 in

Use a 3-inch diameter water quality protection orifice.

Routing the water quality protection volume of 0.76 ac ft through the 3.0-inch water quality protection orifice will allow the designer to verify the drawdown time, as well as the maximum hydraulic head elevation. The routing effect may result in less than 5 percent of the runoff volume being in the storage volume at the design duration. If the volume is less than the 5 percent, then the orifice size should be reduced or storage volume increased to achieve the required 5 percent to provide adequate pollutant removal.

Use of Method 1, utilizing the maximum hydraulic head and discharge and routing, results in a 3.6-inch diameter orifice (though actual routing may result in a changed orifice size) and Method 2, utilizing average hydraulic head and average discharge, results in a 3.0-inch diameter orifice.

5.4 Outlet Structure Protection

5.4.1 Introduction

The susceptibility of outlet structures to clogging by debris and trash needs to be considered when estimating their hydraulic capacities. In most instances an anti-clogging orifice and/or trash rack will be needed. Trash racks are a critical element of outlet structure design and serve important functions, such as keeping debris away from the entrance to the outlet structures so the critical portions of the structure will not clog and capturing debris in such a way that it is relatively easy to remove.

When designed properly, trash racks serve these purposes without interfering significantly with the hydraulic capacity of the outlet (ASCE, 1985; Allred-Coonrod, 1991). The location and size of the trash rack depends on a number of factors, including head losses through the rack, structural convenience, safety and size of outlet.

An example of a trash rack used on a riser outlet structure is shown in Figure 5-12. The inclined vertical bar rack is most effective for lower stage outlets. Debris will slide up the trash rack as the water level increases. This design also allows for removal of accumulated debris with a rake while standing on top of the structure.

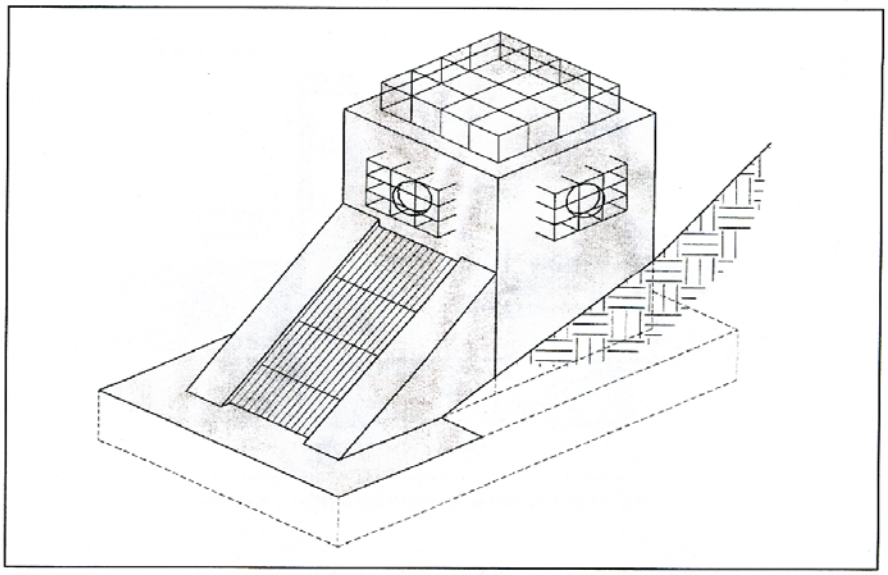

Figure 5-8 Example of Various Trash Racks Used on a Riser Outlet Structure
(Source: VDCR, 1999)

5.4.2 Low Flow Outlet Design

Small low flow orifices such as those used for extended detention applications can easily clog, preventing the outlet structure from meeting its design purpose(s) and potentially causing adverse impacts. There are a number of different anti-clogging designs, including:

- The use of a reverse slope pipe attached to a riser for a storm water pond or wetland with a permanent pool (see Figure 5-9 and 5-12). The inlet is submerged a minimum of 1 foot below the elevation of the permanent pool to prevent floatables from clogging the pipe and to avoid discharging warmer water at the surface of the pond.

- The use of a hooded outlet for a storm water pond or wetland with a permanent pool (see Figures 5-10 and 5-11).
- Internal orifice protection through the use of perforated vertical stand pipe with 1/2-inch orifices or slots that are protected by wirecloth and a stone filtering jacket (see Figure 5-12).

- Inverted water quality orifice as presented in the wet pond chapter (Shown in Figure 4.2.4).

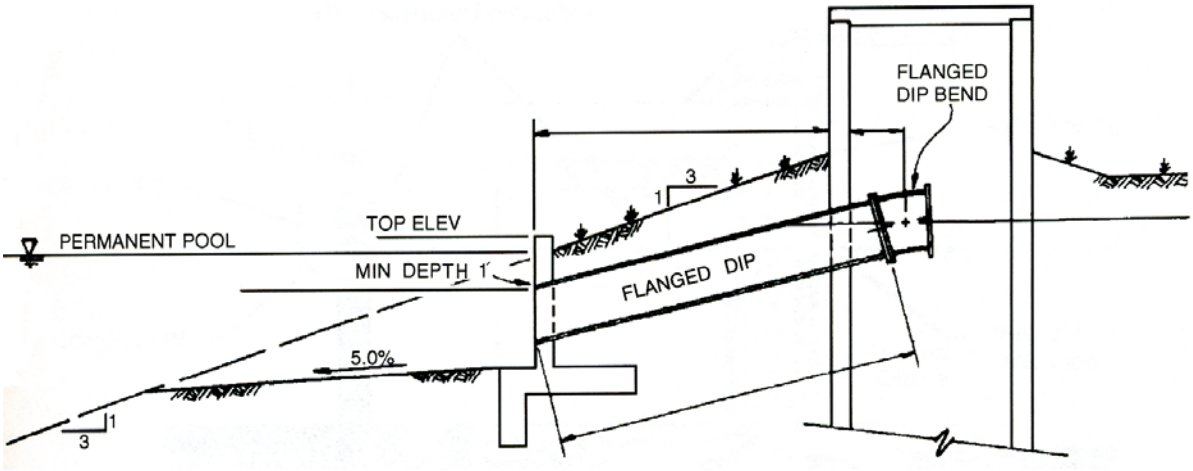

Figure 5-9 Reverse Slope Outlet

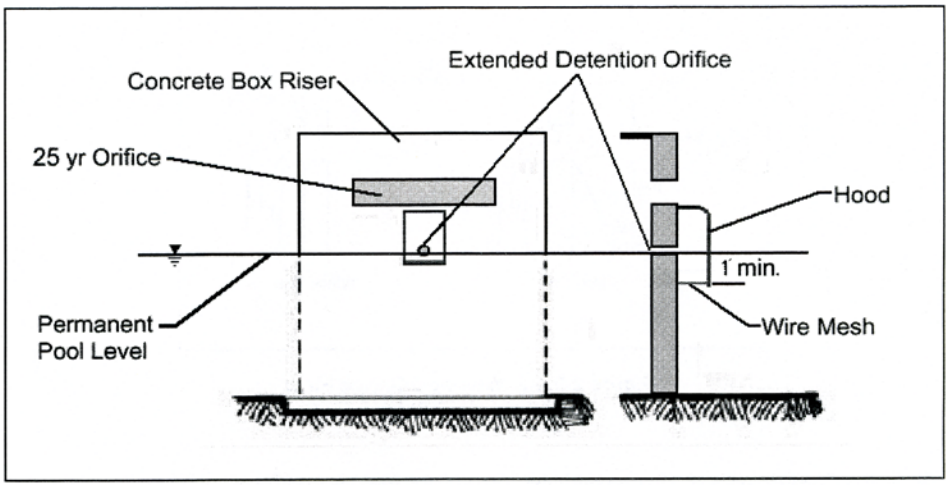

Figure 5-10 Hooded Outlet

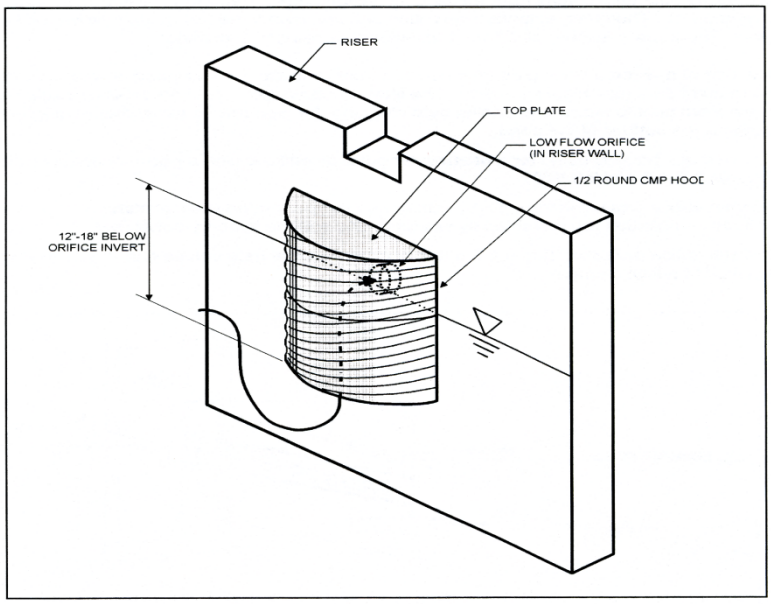

Figure 5-11 Half-Round CMP Orifice Hood

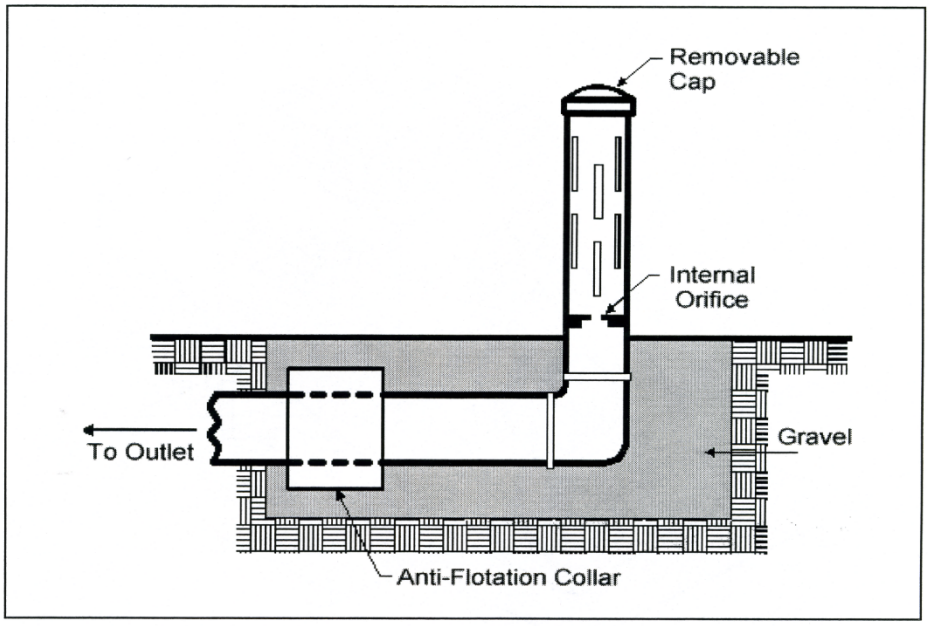

Figure 5-12 Internal Control for Orifice Protection

5.4.3 Trash Rack Design

Trash racks must be large enough so that partial clogging will not adversely restrict flows reaching the control outlet. There are no universal guidelines for the design of trash racks to protect outlet structures, although a commonly used "rule-of-thumb" is to have the trash track area at least ten times larger than the control outlet orifice.

The surface area of all trash racks should be maximized and the trash rack should be located a suitable distance from the protected outlet to avoid interference with the hydraulic capacity of the outlet. The spacing of trash rack bars must be proportioned to the size of the smallest outlet protected. However, where a small orifice is provided, a separate trash rack for that outlet should be used, so that a simpler, sturdier trash rack with more widely spaced members can be used for the other outlets. Spacing of the rack bars should be wide enough to avoid interference, but close enough to provide the level of clogging and safety protection required.

To facilitate removal of accumulated debris and sediment from around the outlet structure, the racks should have hinged connections or other means of access. If the rack is bolted or set in concrete it will preclude removal of accumulated material and will eventually adversely affect the outlet hydraulics. Since sediment will tend to accumulate around the lowest stage outlet, the inside of the outlet structure for a dry basin should be depressed below the ground level to minimize clogging due to sedimentation. Depressing the outlet bottom to a depth below the ground surface at least equal to the diameter of the outlet is recommended.

Trash racks at entrances to pipes and conduits should be sloped at about 3H:1V to 5H:1V to allow trash to slide up the rack with flow pressure and rising water level – the slower the approach flow, the flatter the angle. Figure 5-13 gives opening estimates based on outlet diameter (UDFCD, 1992). Judgment should be used in that an area with higher debris (e.g., a wooded area) may require more opening space.

5.5 Sheet / Diffuse Flow Conditions

5.5.1 Introduction

Some of the BMPs presented in this Manual require sheet flow conditions into and/or through the BMP in order for the pollutant removal mechanisms to be effective. Specifically, flow conditions into bioretention BMPs must be dispersed so that the filter media is not disturbed and/or pollutants are not re-suspended. Flow conditions into a wet pond or wetlands must be dispersed so that previously settled pollutants are not re-suspended. Flow conditions into and through a filter strip, wooded buffer strip, grass channel, and enhanced grass channel must be dispersed so that runoff sheet flows through the vegetation and not over the vegetation.

Additionally, local regulated buffer ordinances (including S.W.I.M buffers, Watersupply Watershed buffers, Riparian buffers, Goose Creek buffers, and Post-Construction buffers) contain requirements to maintain diffuse flow within the buffer. Some ordinances even require periodic corrective action (maintenance) to ensure diffuse flow conditions are maintained within the buffer.

There are numerous storm water features and/or design approaches that result in sheet flow conditions into a bioretention BMP and diffuse flow from a storm water outlet pipe. Common approaches are discussed in the following sections.

5.5.2 Sheet Flow

For the purposes of application of designs in this Manual, sheet flow conditions into a bioretention BMP are represented by flow velocities less than 1 foot per second and depths less than 1 inch for the WQ_v, 1-inch, 6-hour storm event.

Rip rap aprons can be assumed to meet the velocity limitations for sheet flow conditions for the WQ_v, 1-inch, 6-hour storm event, if the apron has been designed in accordance to the design specifications in the Charlotte-Mecklenburg Storm Water Design Manual.

If sheet flow conditions are required, the publication *Hydraulic Design of Energy Dissipators for Culverts and Channels* should be used to check to ensure that the maximum sheet flow depth is not exceeded.

5.5.3 Diffuse Flow into Buffers

For storm water outlet pipes that discharge directly or indirectly to a regulated stream buffer including S.W.I.M buffers, Watersupply Watershed buffers, Riparian buffers, Goose Creek buffers, and Post-Construction buffers, additional design elements will be required to prevent erosive flows through buffers.

Design of storm water outlet pipes should include calculations demonstrating that flow from proposed pipes will not erode down-gradient natural land surface in accordance with the North Carolina Erosion and Sediment Control Planning and Design Manual (NCSCPDM). This demonstration should include design calculations consistent with Chapter 8 – Appendices, Section 8.05 – Design of Stable Channels and Diversions of the NCSCPDM. Within a buffer, design of stable channels from storm water pipes in accordance with this Chapter is considered equivalent to diffuse flow within a buffer. Installation or maintenance of a stable conveyance through the regulated buffer may be allowed with mitigation according to the jurisdiction. This buffer authorization will be reviewed and approved on a case-by-case by the land development review engineer.

5.5.4 Level Spreader

The level spreader major design elements published by the North Carolina Department of Environment

and Natural Resources in Chapter 8 of the NCDENR Stormwater BMP Design Manual are considered appropriate for use to maintain diffuse flow within buffers.

References

Akers, P., 1957. Theoretical Consideration of Side Weirs in Stormwater Overflows, Proc., Inst. Of Civil Engineering, 6, 2.

Allred-Coonrod, J.E., 1991, Safety Grates in Open Channels, MS Prof. Paper. University of New Mexico, Albuquerque.

American Society of Civil Engineers, 1985, Stormwater Detention Outlet Control Structures, Task Committee on the Design of Outlet Control Structures, ASCE, New Your, N.Y.

Brater, E.F. and H.W. King, 1976. Handbook of Hydraulics. 6th ed. New York: McGraw Hill Book Company.
Chow, C.N., 1959. Open Channel Hydraulics. New York: McGraw Hill Company.

Debo, Thomas N and Andrew J. Reese, 2003. Municipal Storm Water Management. Lewis Publishers: CRC Press, Inc., Boca Raton, Florida.

De Marchi, G., 1934. Essay on the Performance of Lateral Weirs, Milan, Italy as cited in Uyumaz, A. and Smith, R.H., Design Procedure for Flow Over Side Weir, ASCE Journal of Irrigation and Drainage Engineering, 117, 1, 1991.

Denver Urban Drainage and Flood control District (UDFCD), 1969, 1992. Urban Drainage Criteria Manual, Volumes 2 and 3, Denver UDFCE.

McEnroe, B.M., J.M. Steichen and R.M. Schweiger, 1988. Hydraulics of Perforated Riser Inlets for Underground Outlet Terraces, Trans ASAE, Vol. 31, No. 4, 1988.

Metcalf & Eddy, Inc., 1972, Wastewater Engineering, McGraw Hill, New York.

NC Sedimentation and Control Commission, NC Department of Environment and Natural Resources, and NC Agricultural Extension Service, 2009, North Carolina Erosion and Sediment Control Planning and Design Manual

NC Department of Environment and Natural Resources, 2007, Stormwater Best Management Practices Manual

NRCS, 1984. Engineering Field Manual for Conservation Practices, Soil Conservation Service, Engineering Division, Washington, D.C.

Virginia Department of Conservation and Recreation, 1999. Virginia Stormwater Management Handbook.

Ramamurthy, R.S., Tim, U.S., and Rao, M.V.J., 1988. Characteristics of Square-edged and round-nosed Broad-crested Weirs, ASCE J. Irrigation Drainage Engineering, 114.

Rantz, S.E., 1982. Measurement and Computation of Streamflow, 2 Vol., U.S. Geological Survey Water Supply Paper 2175.

Sandvik A., 1985. Proportional Weirs for Stormwater Pond Outlet. Civil Engineering, March 1985, ASCE pp. 54-56.

Soil Conservation Service, 1965. Hydraulics of Two-way Covered Risers, TR No. 29.

Metropolitan Government of Nashville and Davidson County, 1988. Stormwater Management Manual – Volume 2 Procedures. Prepared by AMEC, Inc. (formerly The Edge Group) and CH2M Hill.

United States Bureau of Reclamation, 1974. Water Management Manual.

U.S. Department of Transportation, 1983. Hydraulic Design of Energy Dissipators for Culverts and Channels

U.S. Army Corps of Engineers, 1988. Hydraulic Design Criteria (HDC), USAE Waterways Experiment Station, Vicksburg, MS.

U.S. Bureau of Reclamation, 1978. Design of Small Canal Structures.

U.S. Bureau of Reclamation, 1974. Water Measurement Manual.

Urban Drainage and Flood Control District, 1999. Criteria Manual, Denver, CO.

Wycuff, R.L and U.P. Singh, 1976. Preliminary Hydrologic Design of Small Flood Detention Reservoirs. Water Resources Bulletin, Vol. 12, No. 2, pp 337-49.