INDEX OF SHEETS

Cover Sheet	1	
General Notes	2	Not Included in Real Estate Submittal
Drainage Summary Sheet	3	Not Included in Real Estate Submittal
Plan & Profile	4-11	
Details	D1	Not Included in Real Estate Submittal
Structural Details	S1	Not Included in Real Estate Submittal
Erosion Control	EC1-EC4	
Traffic Control Plans	TCP1-TCP2	Not Included in Real Estate Submittal
Utility Plans	U1-U2	

TOTAL SHEETS 21

CHARLOTTE
ENGINEERING & PROPERTY MANAGEMENT

Construction Plans of Proposed
Pierson-Greenhaven Storm Drainage Improvement Project
Project No. 671-12-003

Project Features:

Reinforced Concrete Pipe
Ditch Re-grading
Utility Relocation
Curb and Gutter
Asphalt Paving
Traffic Control

PE SEAL

Record Drawings

CONVENTIONAL SIGNS

Existing Property Line
Maintained as R/W Line
Existing Structures
Railroad Tracks
Proposed Edge of Pavement
Fence
Slope Stake Line
Temporary Construction Easement
Sidewalk Utility Easement
Storm Drainage Easement
Existing Gas Line
Existing Water Line
Existing Sanitary Sewer
Existing Underground Telecommunications
Existing Underground Electric
Existing Storm Drainage
Proposed Storm Drainage
Existing Tree
Existing Water Meter
Existing Water Valve
Existing Gas Valve
Existing Sanitary Sewer Manhole
Proposed Sanitary Sewer Manhole
Existing Storm Drain Manhole
Proposed Storm Drain Manhole
Existing Telephone Manhole
Proposed Telephone Manhole
Existing Electric Manhole
Proposed Electric Manhole
Existing Catch Basin
Proposed Catch Basin
Existing Light Pole
Proposed Light Pole
Existing Utility Pole
Guy Wire
Proposed Utility Pole
Iron Pin
Existing Fire Hydrant
Proposed Fire Hydrant
Existing Drop Inlet
Proposed Drop Inlet
Protect Satellite Dish
Accessible Ramp
Tree Protection
Proposed Guardrail
Silt Fence
Proposed Curb & Gutter, Conc. Drive, Sidewalk
Proposed Asphalt Pavement
Proposed Rip Rap Ditch
Proposed Gravel
Proposed Pavement Removal
Proposed Sidewalk Bridging Tree Roots

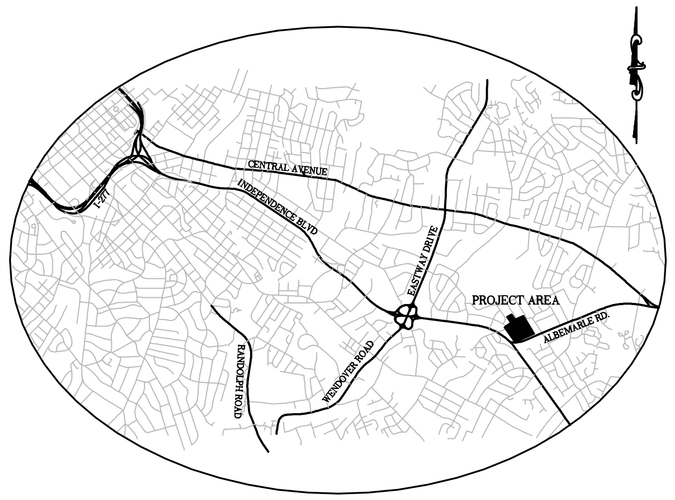

VICINITY MAP
NTS

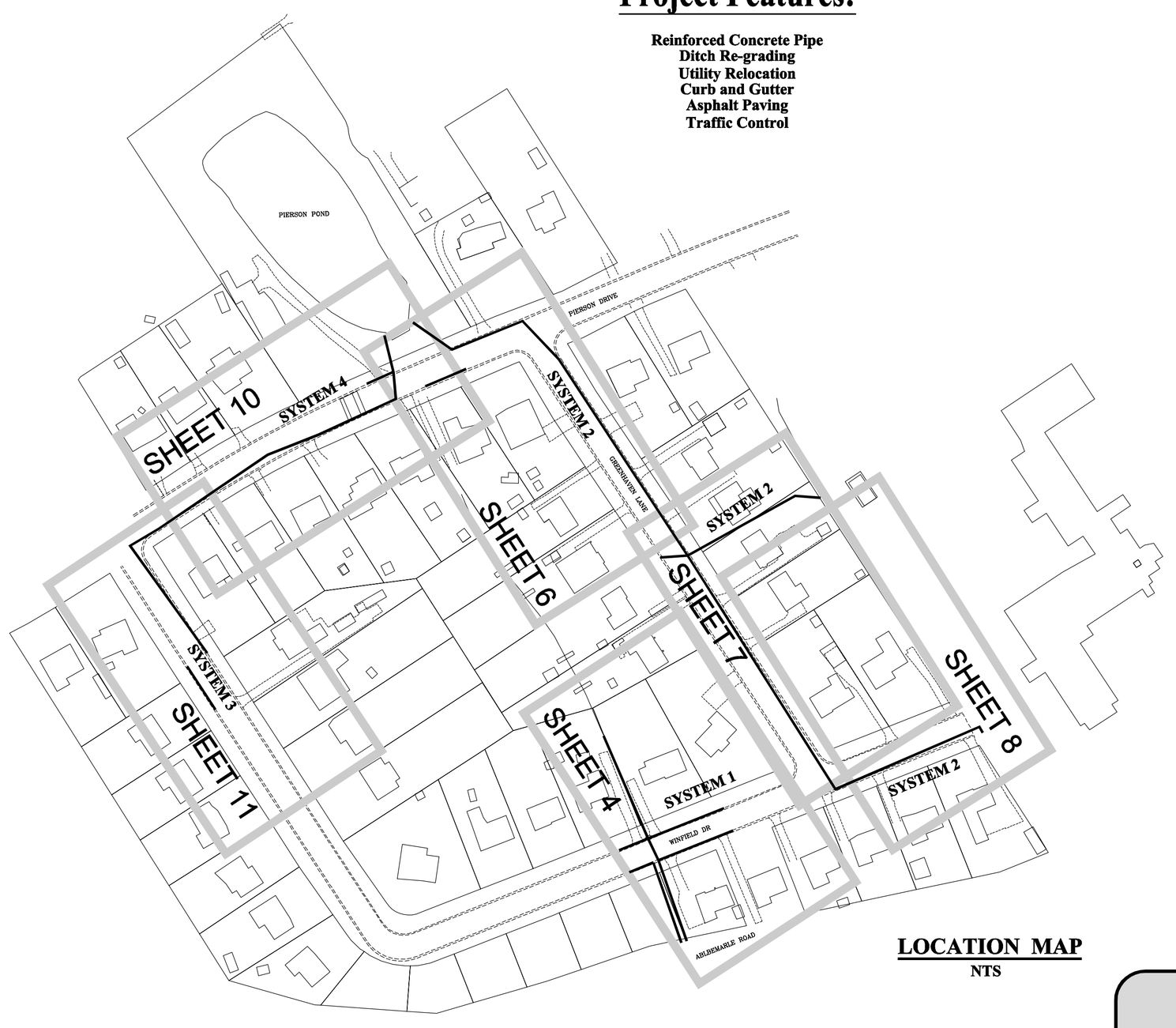

LOCATION MAP
NTS

NAD 1983

SURVEY PREPARED BY:

CITY OF CHARLOTTE SURVEY-MAPPING-GIS FROM THE LOCALIZED COORDINATE SYSTEM DEVELOPED FOR THIS PROJECT IS BASED ON STATE PLANE COORDINATES ESTABLISHED BY: NCGS MONUMENT OR CONTROL POINT WITH NAD 83(2011) STATE PLANE COORDINATES OF NORTHING:0.00000000 EASTING: 0.000000000 ELEVATION NAVD: THE AVERAGE COMBINED GRID FACTOR USED ON THIS PROJECT (GROUND TO GRID) IS: 0.00000000
VERTICAL DATUM: NAVD 88
ALL LINEAR DIMENSIONS ARE LOCALIZED HORIZONTAL DISTANCES. DATE RANGE OF SURVEY:00/00/0000 TO 00/00/0000

PLANS PREPARED BY:

Charlotte-Mecklenburg STORM WATER Services

PARSONS BRINCKERHOFF
121 WEST TRADE STREET
SUITE 1950
CHARLOTTE, NC 28202
NC LICENSE NUMBER: F-0165

GRAPHIC SCALES

Plan View 20 40 60
Horz. Profile 20 40 60
Vert. Profile 4 8 12
Cross Section 5 10 15

RECOMMENDED FOR CONSTRUCTION

Contract Administration	
Storm Water Construction	
Landscape Management	
CDOT - Design	
CDOT - Implementation	
CMUD	
Utility Coordination	
Storm Water Project Manager	

CHARLOTTE
ENGINEERING & PROPERTY MANAGEMENT

Bid Set No. _____

APPROVED _____ CITY ENGINEER _____ DATE

Project Number: 671-12-003

Project Name: Pierson - Greenhaven Storm Drainage Improvement Project

SHEET	Pierson-Greenhaven Storm Drainage Improvements	671-12-003	H:1"=20', V:1"=4'
4		JOB NO.	SCALE
OF 11	SYSTEM 1	JMB	RMG
		PREPARED BY	CHECKED BY
		KRD	JULY 2014
		APPROVED BY	DATE

Charlotte-Mecklenburg STORM WATER Services

NO.	DATE	BY	DESCRIPTION
1	10/14	RMG	70% COMMENTS

Plans Prepared By:
PARSONS BRINCKERHOFF
121 WEST TRADE STREET
SUITE 1950
CHARLOTTE, NC 28202

CHARLOTTE.

PRELIMINARY
NOT FOR CONSTRUCTION

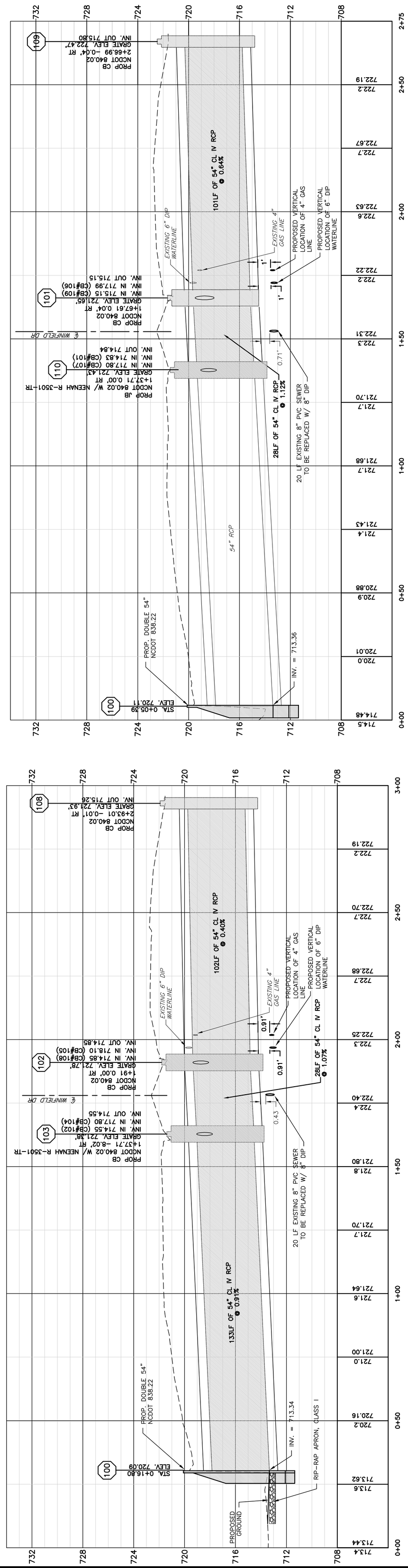

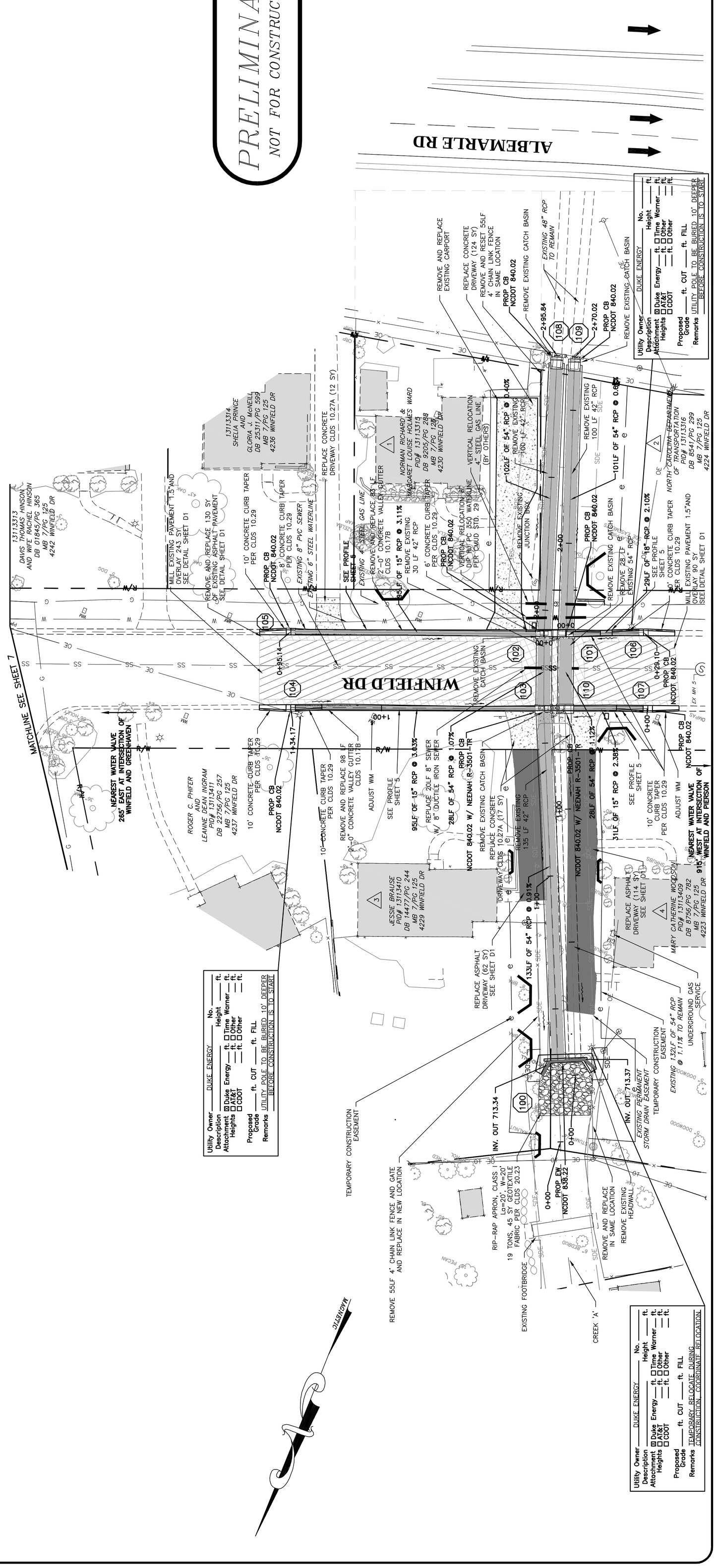

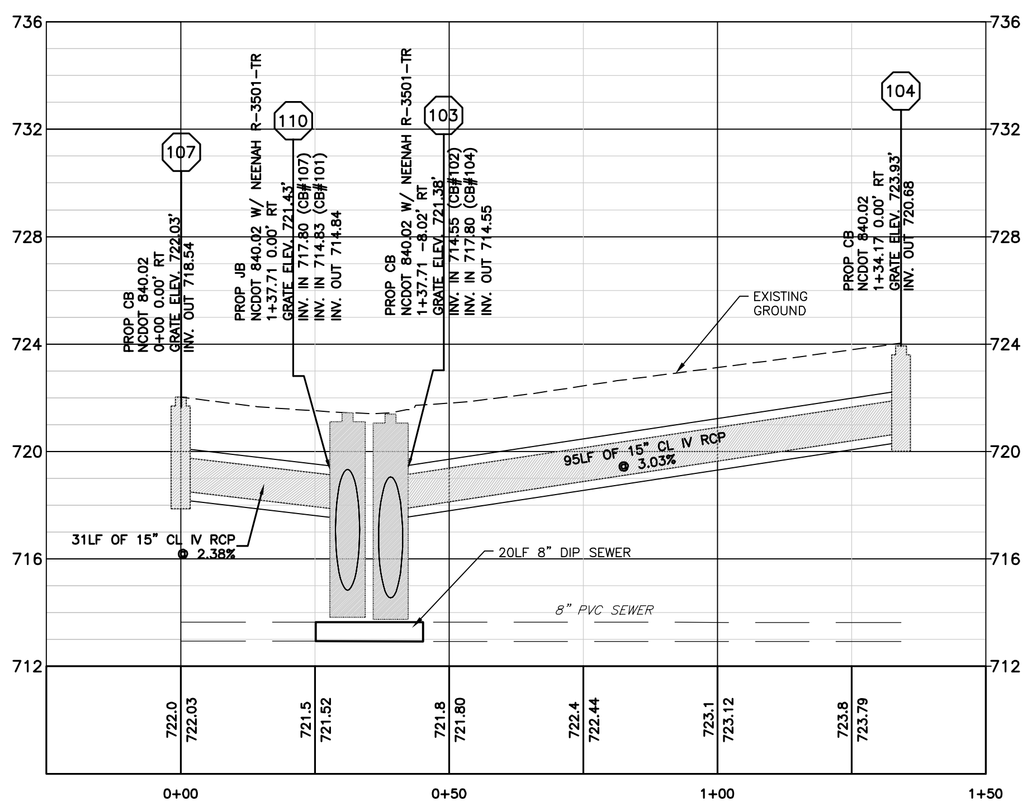

SYSTEM 1
CB 104 - CB 103
CB 107 - CB 110
SEE SHEET 4 FOR PLAN VIEW

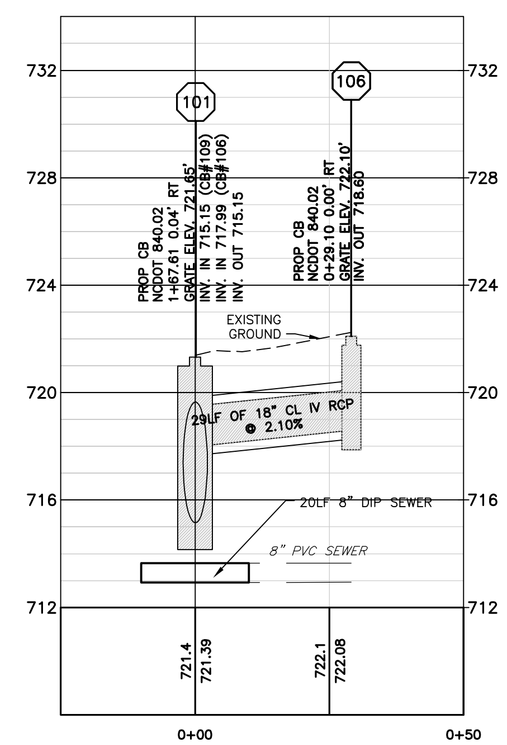

SYSTEM 1
CB 106 - CB 101
SEE SHEET 4 FOR PLAN VIEW

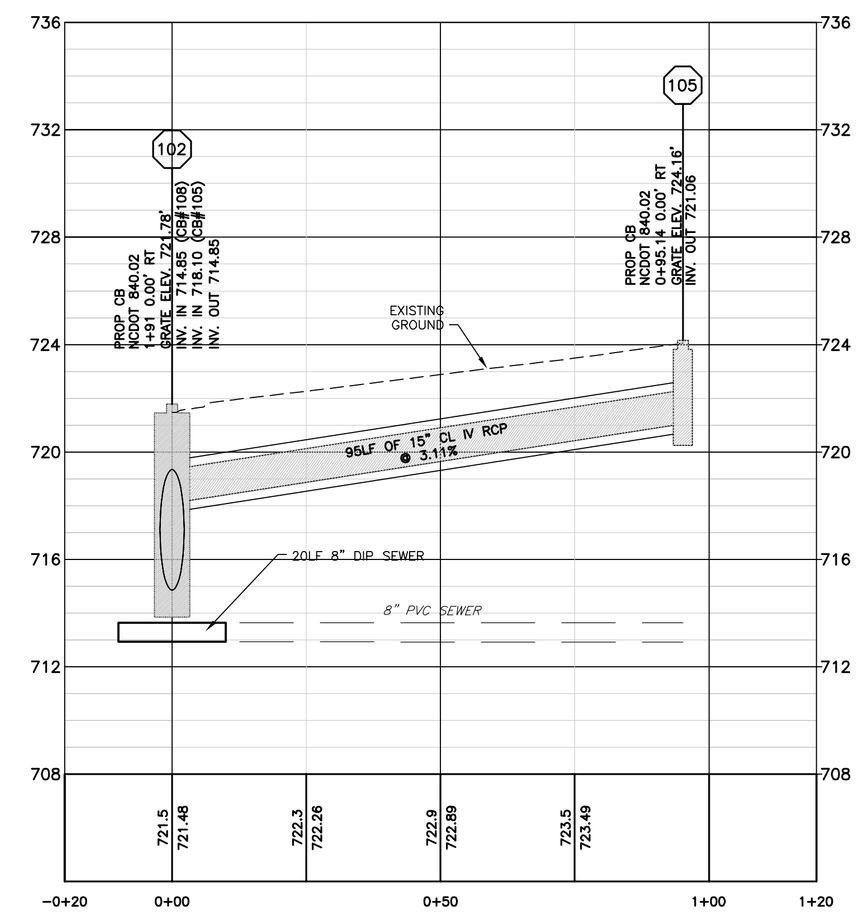

SYSTEM 1
CB 105 - CB 102
SEE SHEET 4 FOR PLAN VIEW

PRELIMINARY
NOT FOR CONSTRUCTION

CHARLOTTE.

Plans Prepared By:
PARSONS BRINCKERHOFF
121 WEST TRADE STREET
SUITE 1950
CHARLOTTE, NC 28202

NO.	DATE	BY	DESCRIPTION
1	10/14	RMG	70% COMMENTS

Charlotte-Mecklenburg STORM WATER Services

H:1"=20', V:1"=4'
SCALE

671-12-003
JOB NO.

a:\V70400A_PIERSON_DESIGN_MVI_CAD\V70400A - PPRS_REV_20110314.DWG
CAD FILE PATH

JAB
PREPARED BY

RMG
CHECKED BY

KRD
APPROVED BY

JULY 2014
DATE

Pierson-Greenhaven Storm Drainage Improvements

SYSTEM 1

SHEET 5 OF 11

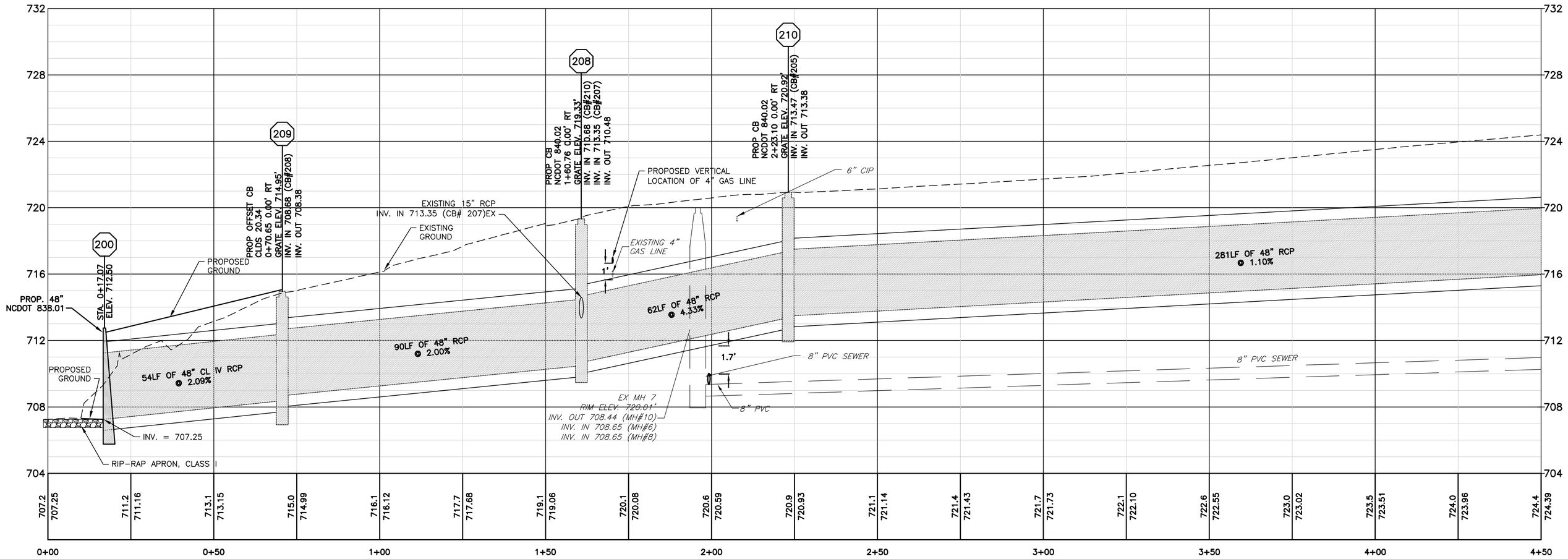

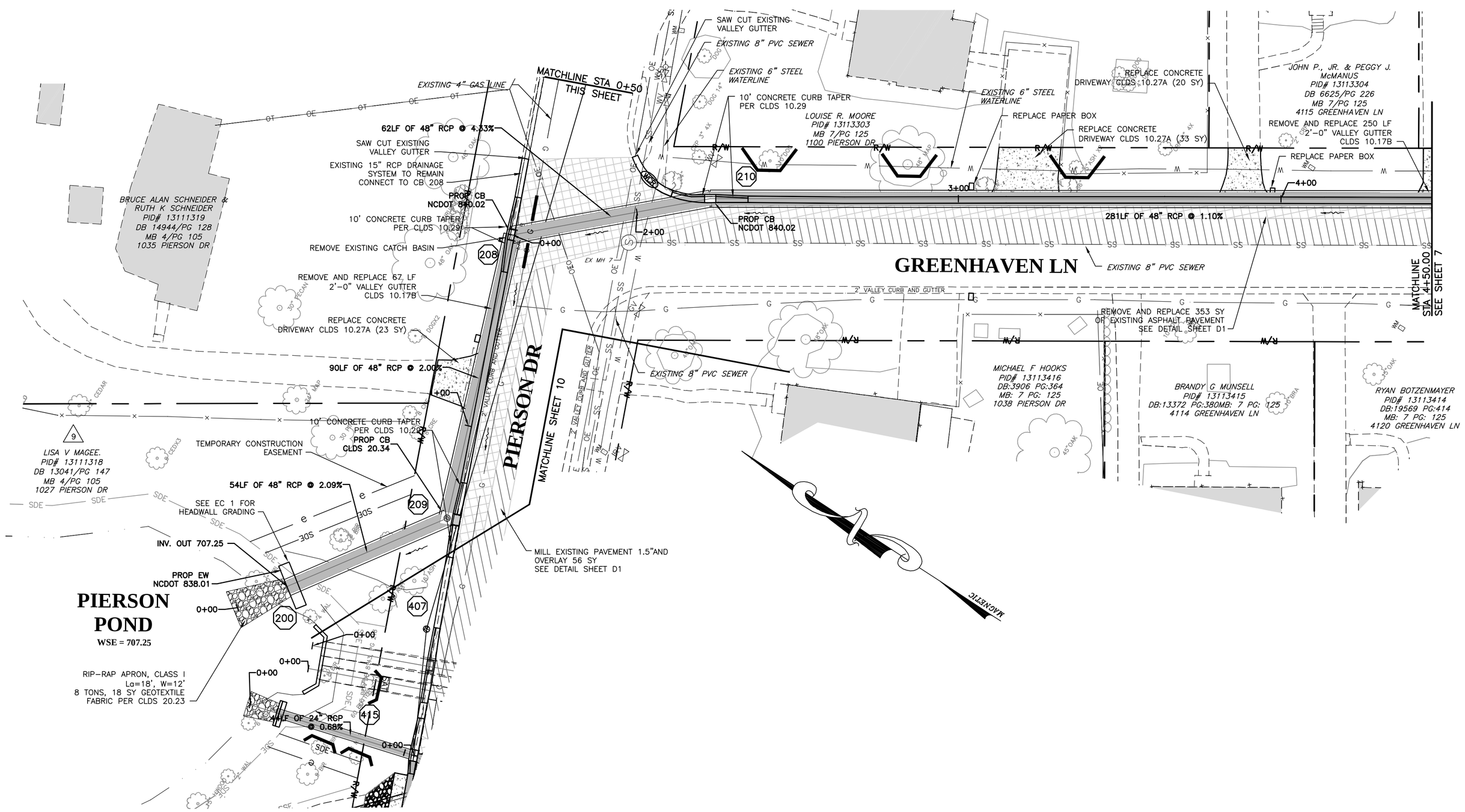

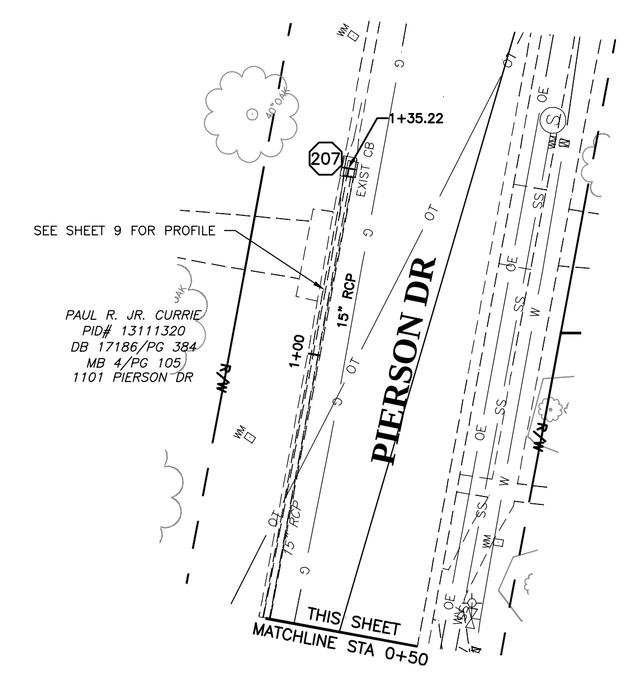

PRELIMINARY
NOT FOR CONSTRUCTION

CHARLOTTE.

Plans Prepared By:
PARSONS BRINCKERHOFF
121 WEST TRADE STREET
SUITE 1950
CHARLOTTE, NC 28202

NO.	DATE	BY	DESCRIPTION
1	10/14	RMG	70% COMMENTS

Charlotte-Mecklenburg STORM WATER Services

H:1"=20', V:1"=4'	SCALE
671-12-003	JOB NO.
J:\V73608A_PIERSON_DESIGN\WA\CAD\V73608A - PPES_REV_20110214.DWG	CAD FILE PATH
JMB	PREPARED BY
RMG	CHECKED BY
KRD	APPROVED BY
JULY 2014	DATE

Pierson-Greenhaven Storm Drainage Improvements

SYSTEM 2
STA: 0+00 TO 4+50

SHEET 6 OF 11

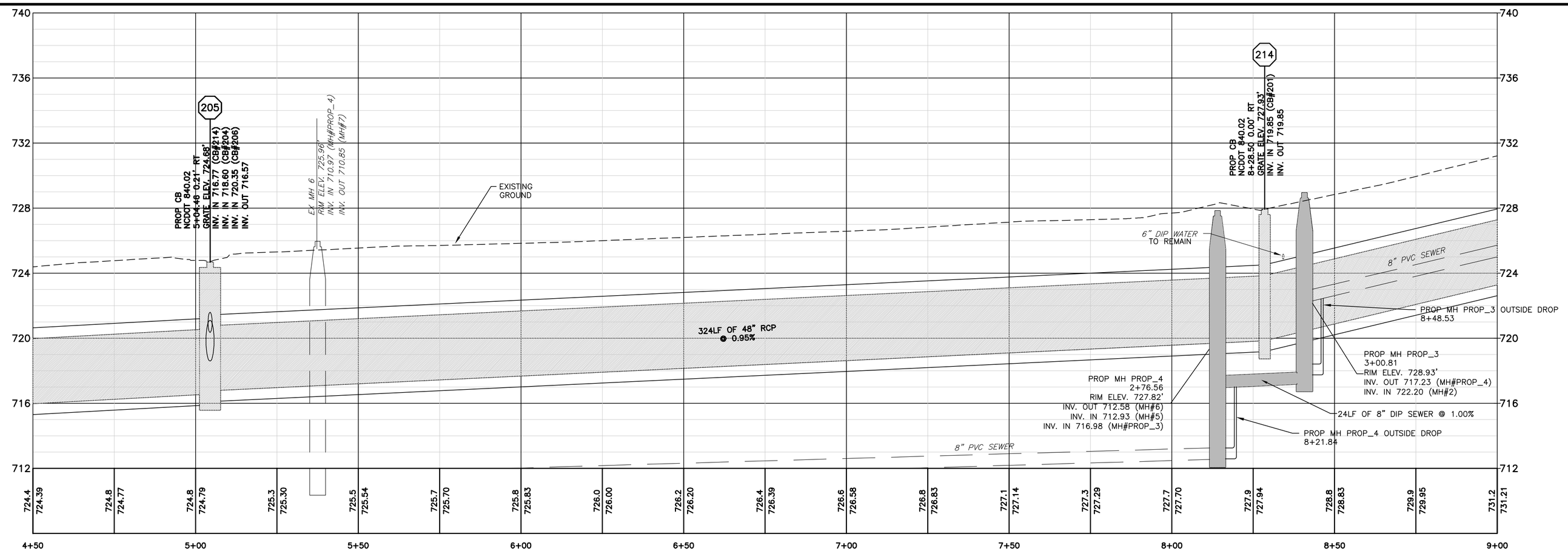

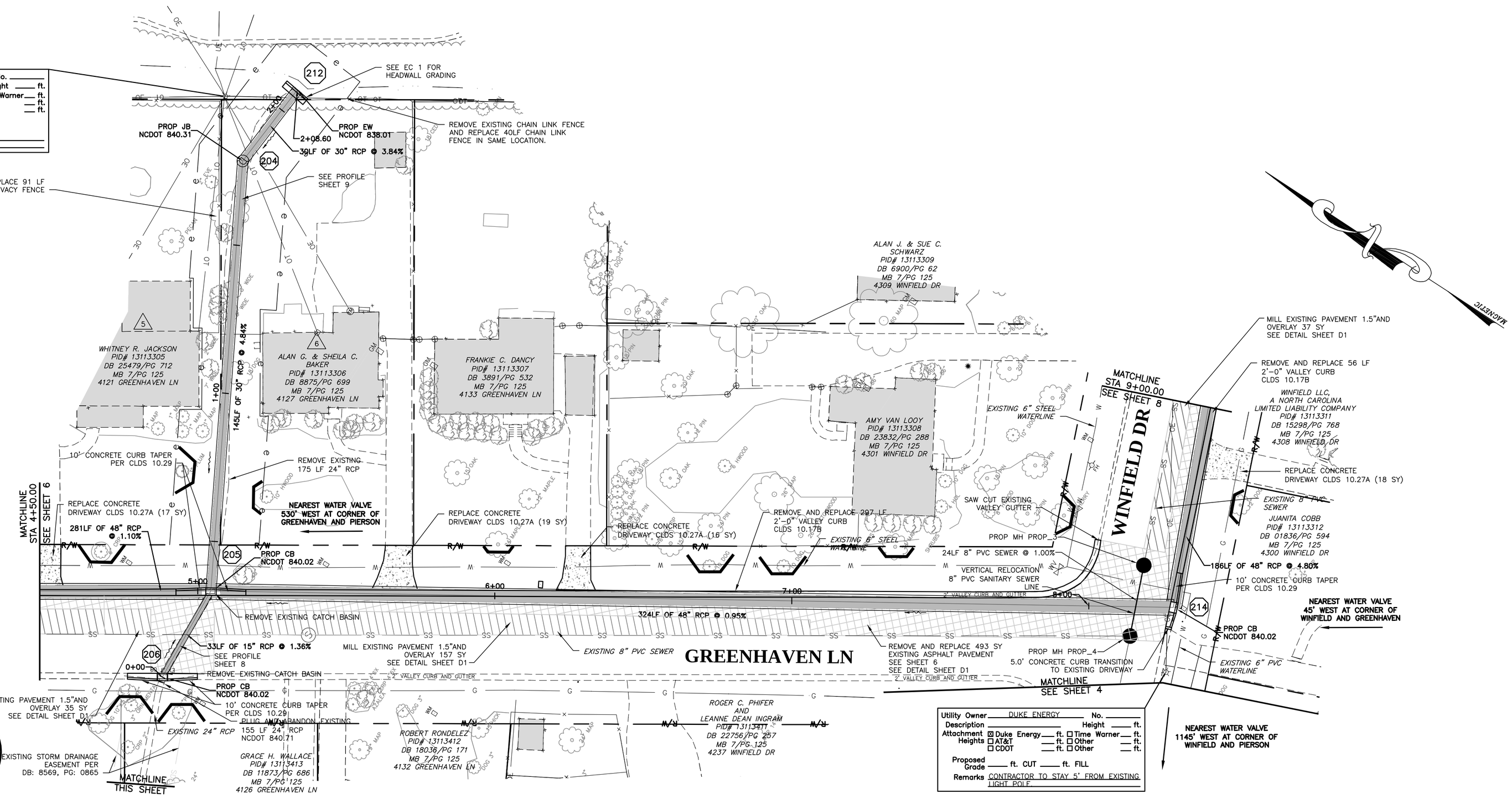

PRELIMINARY
NOT FOR CONSTRUCTION

CHARLOTTE.

Plans Prepared By:
PARSONS BRINCKERHOFF
121 WEST TRADE STREET
SUITE 1950
CHARLOTTE, NC 28202

NO.	DATE	BY	DESCRIPTION
1	10/14	RMG	70% COMMENTS

Charlotte-Mecklenburg STORM WATER Services

H:1"=20', V:1"=4'
SCALE

671-12-003
JOB NO

a:\70tb004 - PERSON, SUDDUTH, CAIN\70tb004 - PIPES_NCC_CB11SH_4.DWG
CAD FILE PATH

RMG
CHECKED BY

JMB
PREPARED BY

JULY 2014
DATE

KRD
APPROVED BY

Pierson-Greenhaven Storm Drainage Improvements

SYSTEM 2
STA: 4+50 TO 9+00

SHEET 7 OF 11

DITCH B

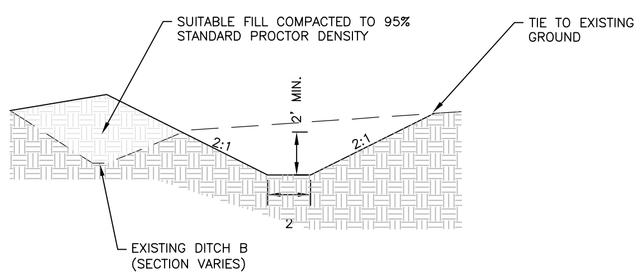

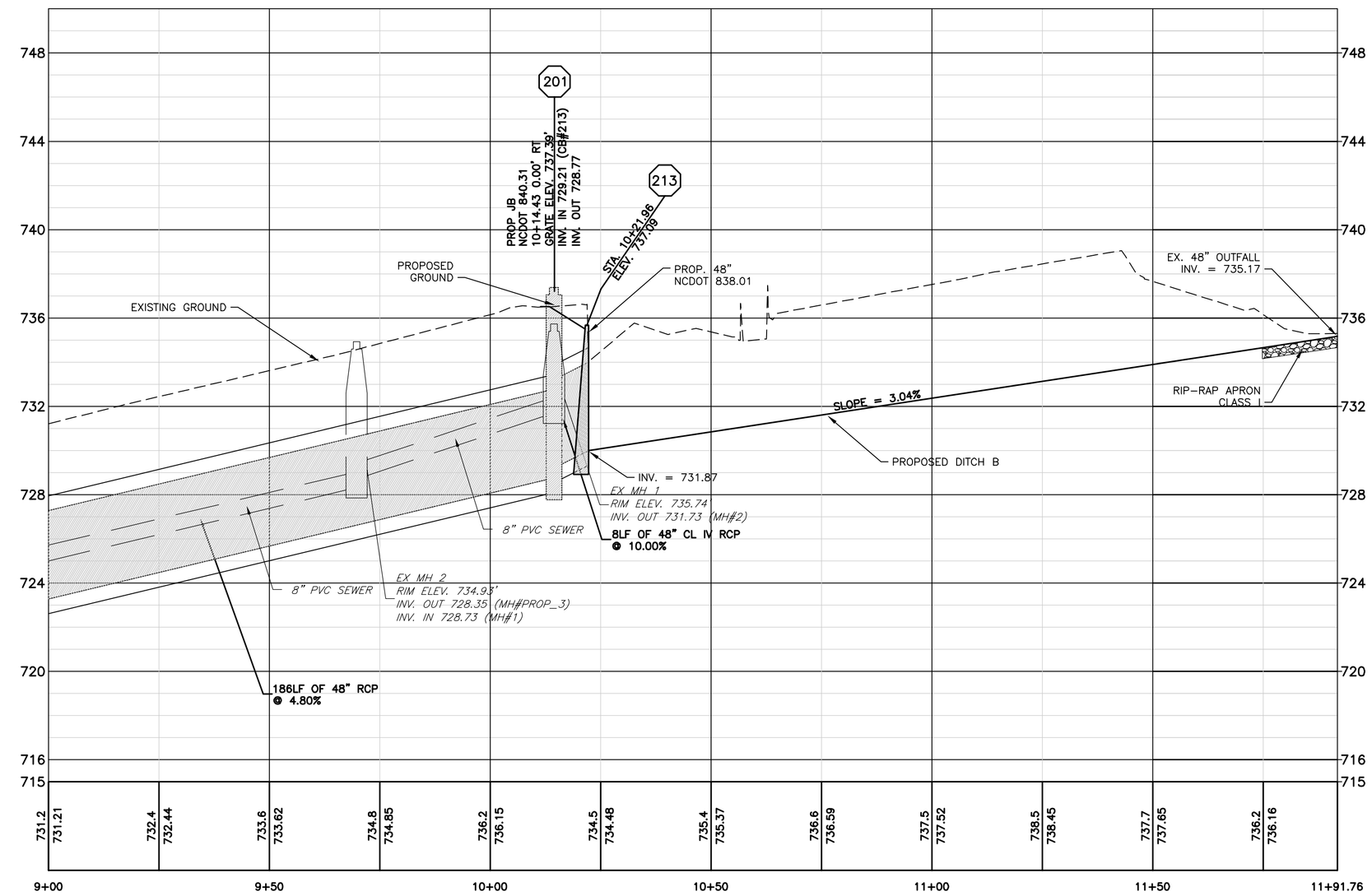

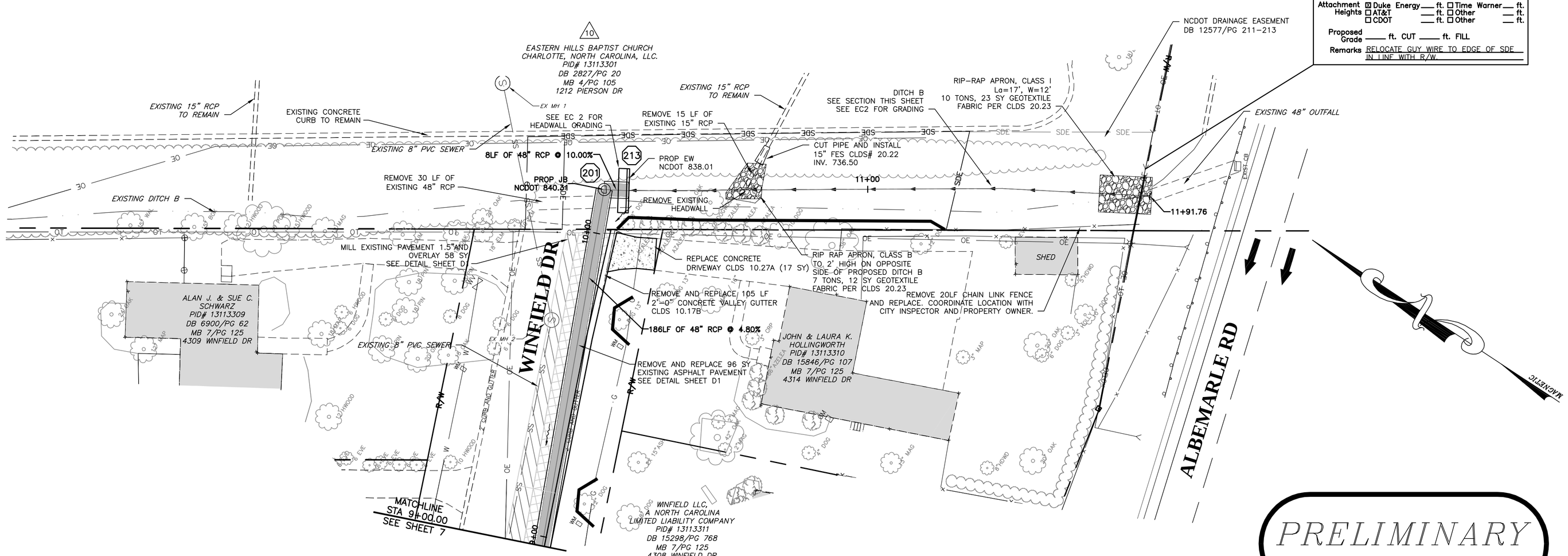

PRELIMINARY
NOT FOR CONSTRUCTION

CHARLOTTE.

Plans Prepared By:
PARSONS BRINCKERHOFF
121 WEST TRADE STREET
SUITE 1950
CHARLOTTE, NC 28202

NO.	DATE	BY	DESCRIPTION
1	10/14	RMG	70% COMMENTS

Charlotte-Mecklenburg STORM WATER Services

671-12-003 JOB NO.	H:1"=20', V:1"=4' SCALE
a-V75600A PIERSON_DESIGN_M1A.CAD V75600A - PIPES_REV_20110214.DWG	CAD FILE PATH
JAB PREPARED BY	RMG CHECKED BY
KRD APPROVED BY	JULY 2014 DATE

Pierson-Greenhaven Storm Drainage Improvements

SYSTEM 2
STA: 9+00 TO 11+64.89

SHEET 8 OF 11

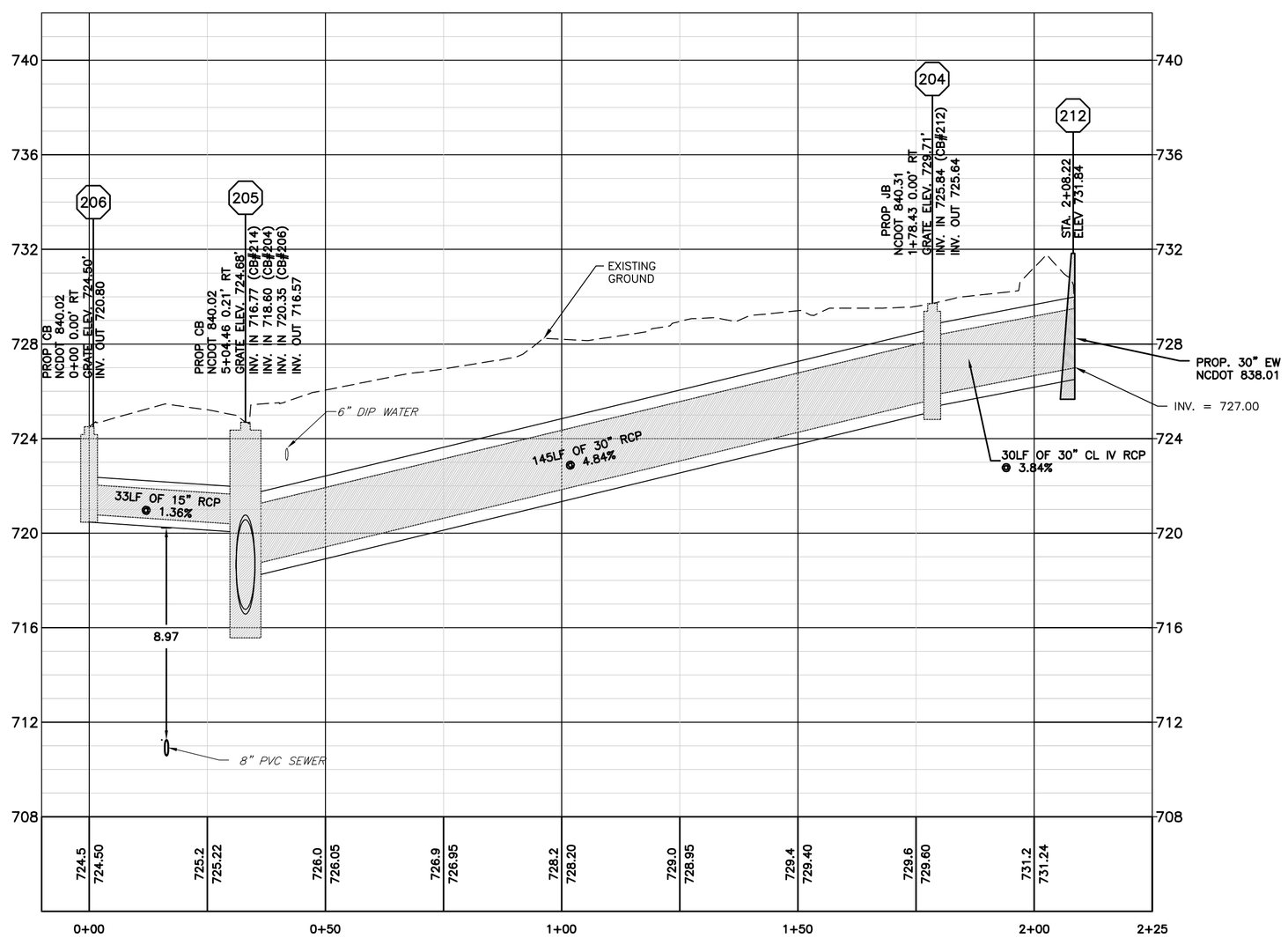

SYSTEM 2
HW 212 - CB 205
CB 206 - CB 205
SEE SHEET 7 FOR
PLAN VIEW

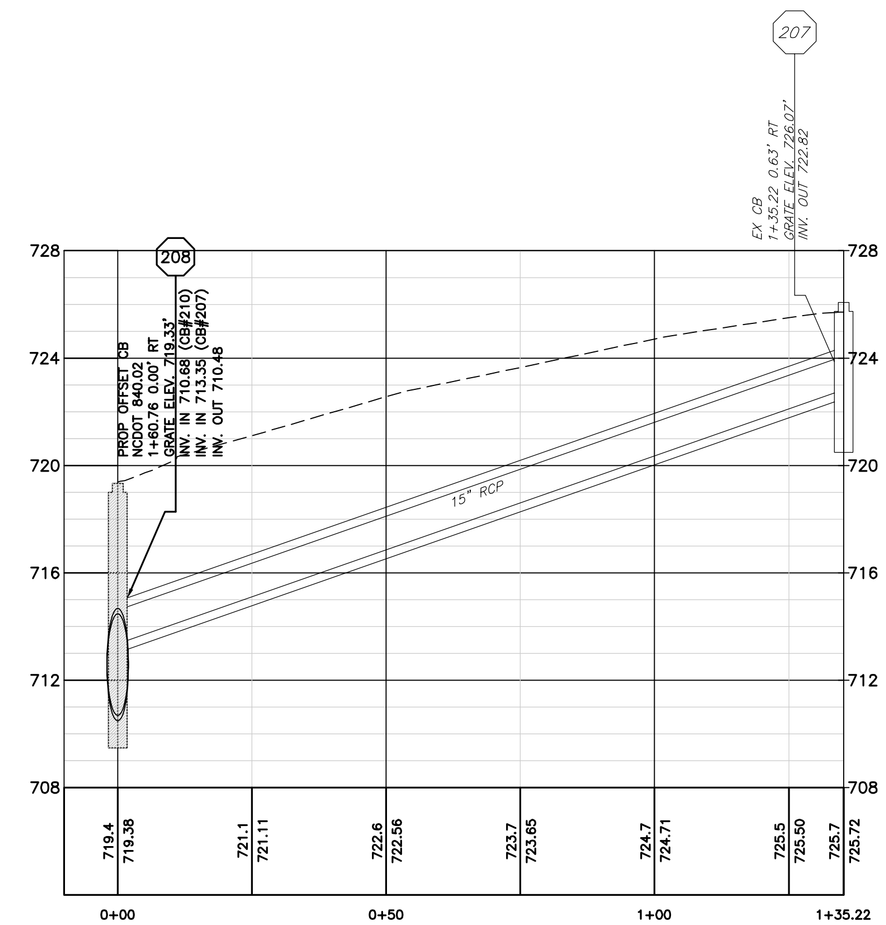

SYSTEM 2
EX CB 207 - CB 208
SEE SHEET 6 FOR
PLAN VIEW

CHARLOTTE.

Plans Prepared By:
PARSONS BRINCKERHOFF
121 WEST TRADE STREET
SUITE 1950
CHARLOTTE, NC 28202

NO.	DATE	BY	DESCRIPTION
1	10/14	RMG	70% COMMENTS

Charlotte-Mecklenburg STORM WATER Services

671-12-003
JOB NO
H=1"=20' V=1"=4'
SCALE
J:\V70408A PIERSON RD\CADD\70408A - PPES_REV_20110314.DWG
CAD FILE PATH
JMB
PREPARED BY
RMG
CHECKED BY
KRD
APPROVED BY
JULY 2014
DATE

Pierson-Greenhaven Storm Drainage Improvements

SYSTEM 2

SHEET 9 OF 11

SHEET		
10	Pierson-Greenhaven Storm Drainage Improvements	SYSTEM 4
OF 11		

JOB NO. 671-12-003	SCALE H:1"=20', V:1"=4'
𝐶:\173608A PIERSON DESIGN\WAT\CAD\173608A – PIPES_REV_05112014.DWG	CAD FILE PATH
PREPARED BY JMB	CHECKED BY RMG
APPROVED BY KRD	DATE JULY 2014

Charlotte-Mecklenburg STORM WATER Services

NO.	DATE	BY	DESCRIPTION
1	10/14	RMG	70% COMMENTS

Plans Prepared By:
PARSONS BRINCKERHOFF
121 WEST TRADE STREET
SUITE 1950
CHARLOTTE, NC 28202

CHARLOTTE.

PRELIMINARY
NOT FOR CONSTRUCTION

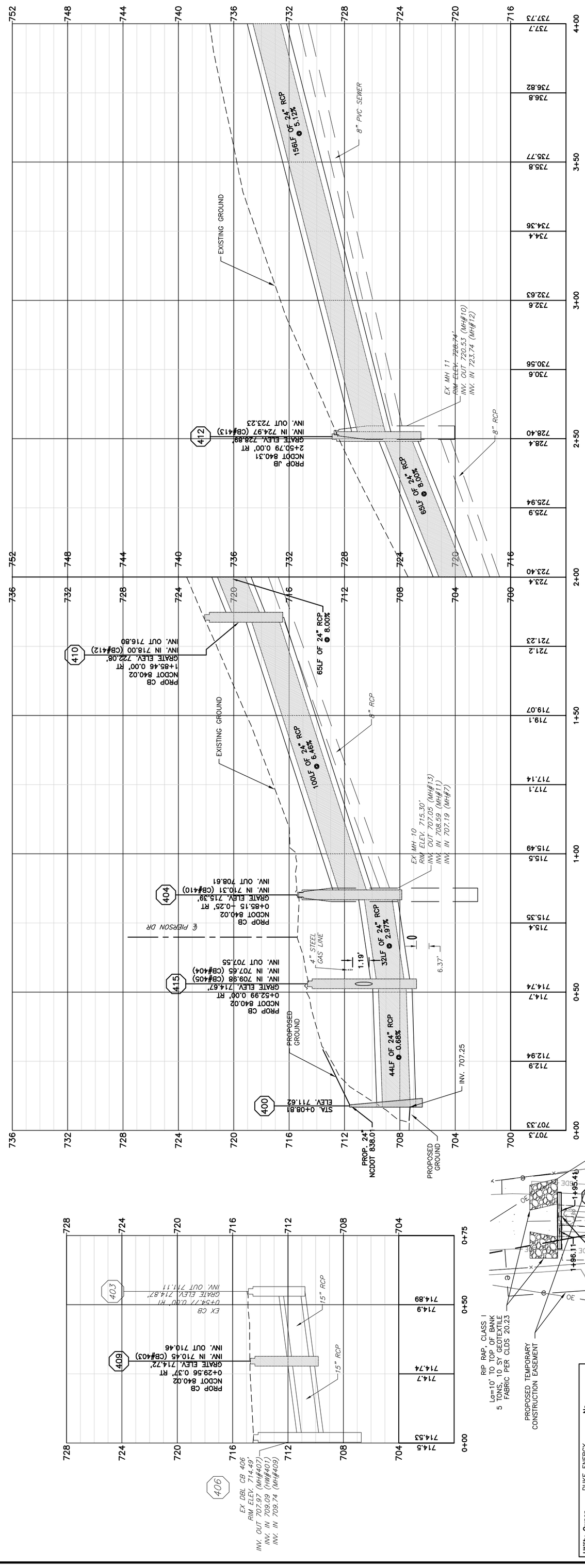

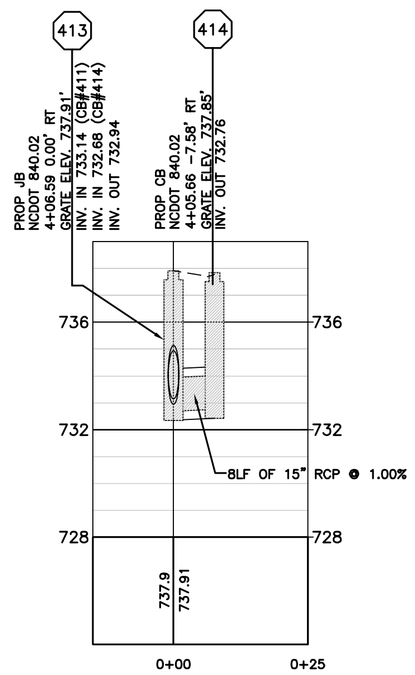

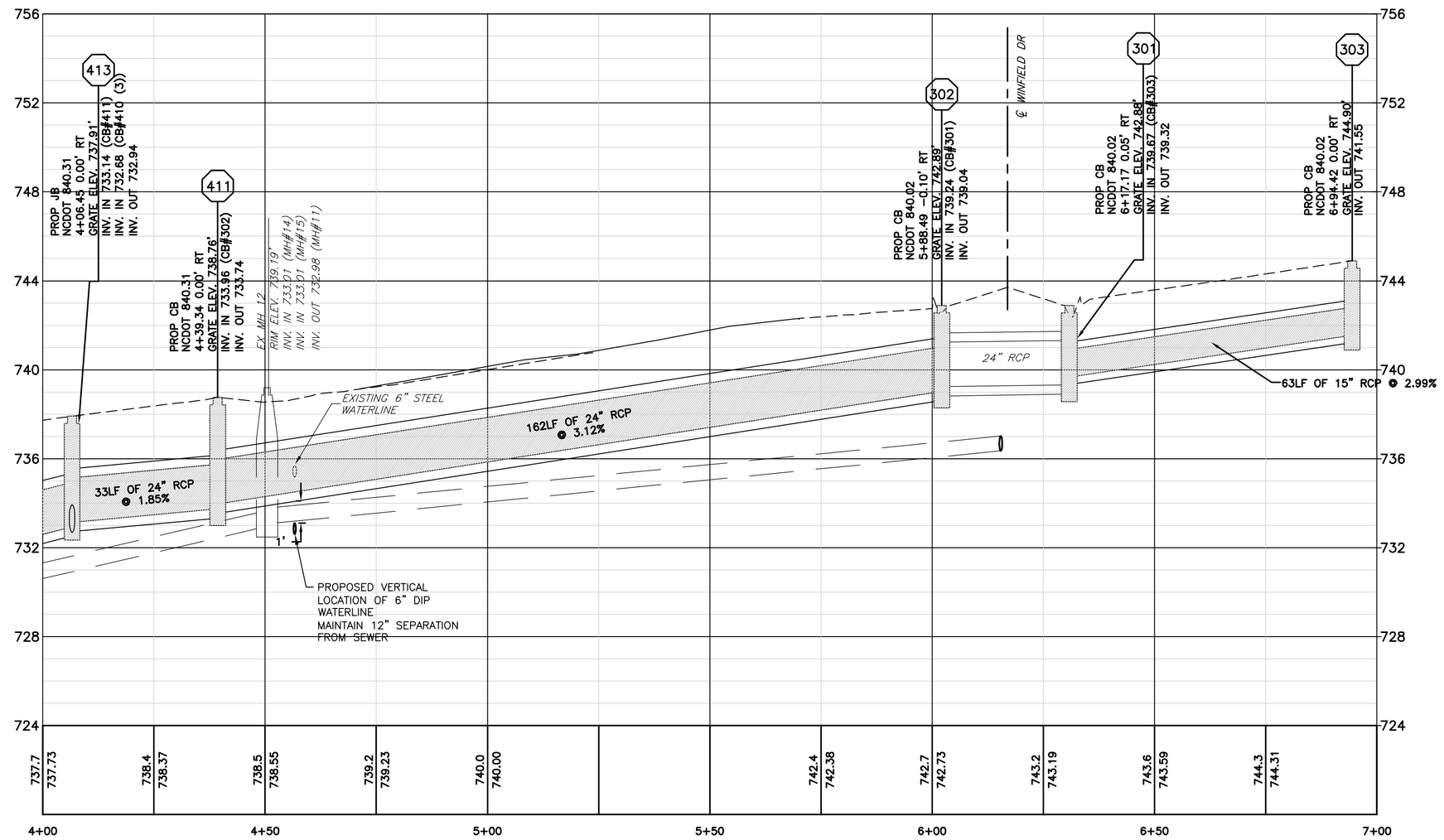

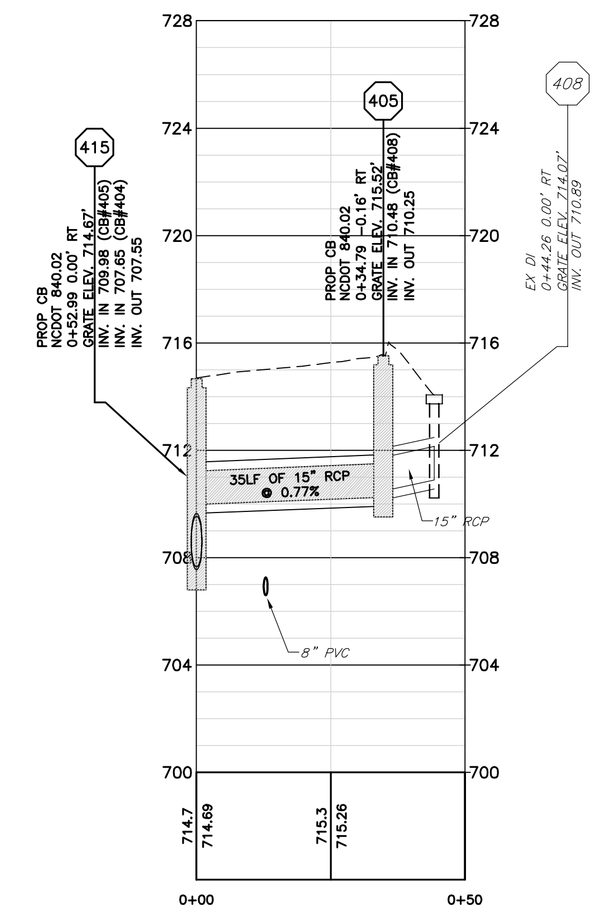

SYSTEM 4
DI 408- CB 415
SEE SHEET 10 FOR PLAN VIEW

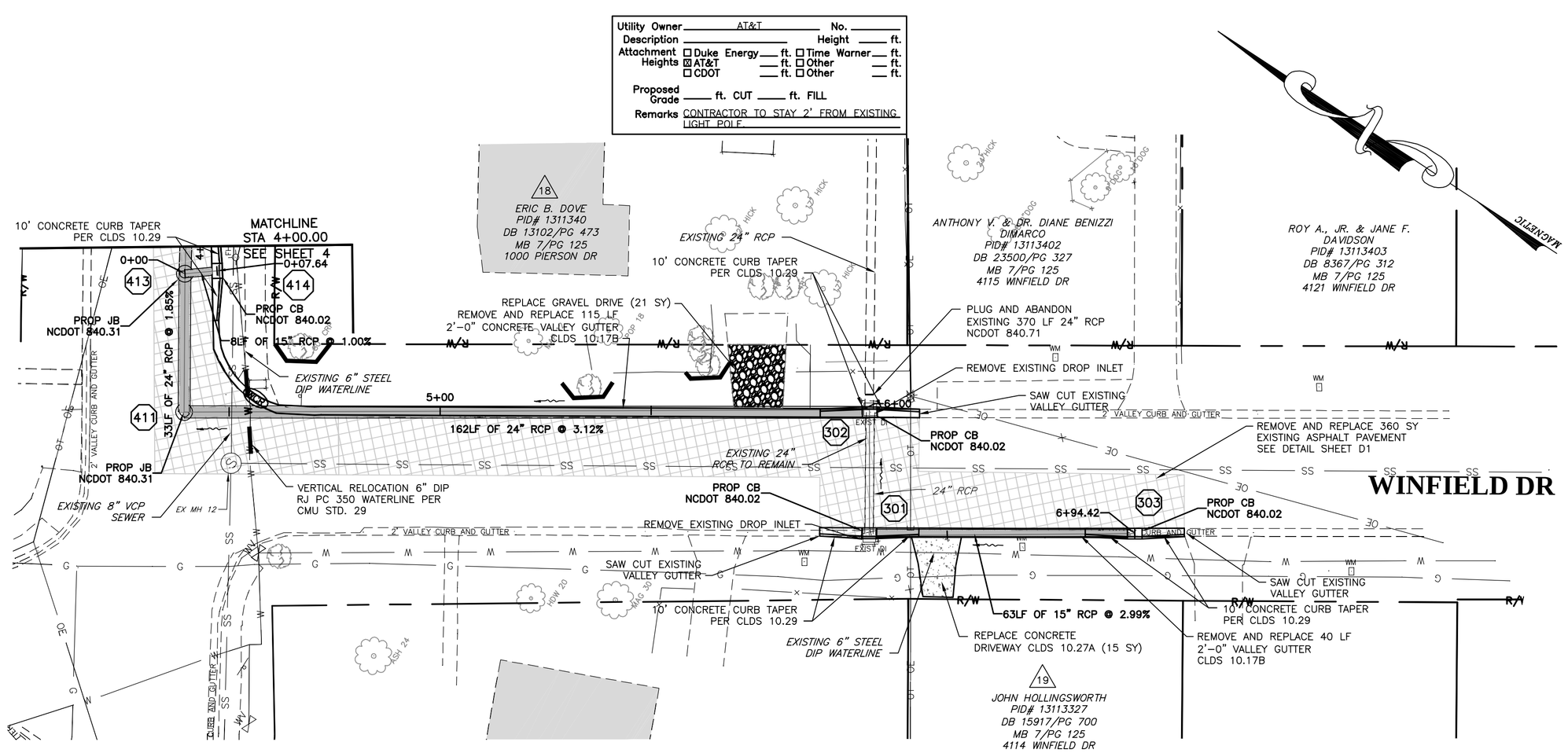

PRELIMINARY
NOT FOR CONSTRUCTION

CHARLOTTE.

Plans Prepared By:
PARSONS BRINCKERHOFF
121 WEST TRADE STREET
SUITE 1950
CHARLOTTE, NC 28202

NO.	DATE	BY	DESCRIPTION
1	10/14	RMG	70% COMMENTS

Charlotte-Mecklenburg STORM WATER Services

671-12-003 JOB NO.	H:1"=20', V:1"=4' SCALE
u:\V73602A_PIERSON_DESIGN\MAT\CAD\V73602A - PPR3_REV_20110214.DWG CAD FILE PATH	
JAB PREPARED BY	RMG CHECKED BY
KRD APPROVED BY	JULY 2014 DATE

Pierson-Greenhaven Storm Drainage Improvements

SYSTEM 4
STA: 4+50 TO 6+80.66

SHEET 11 OF 11

ROADWAY TYPICAL SECTIONS

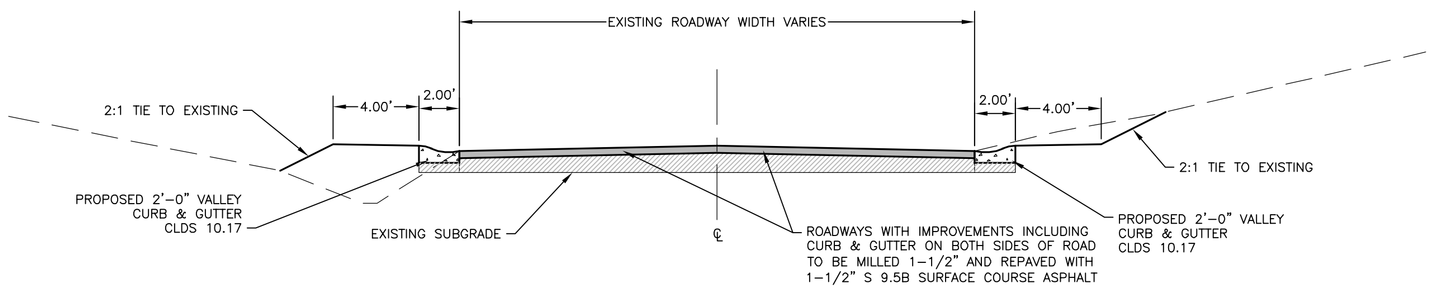

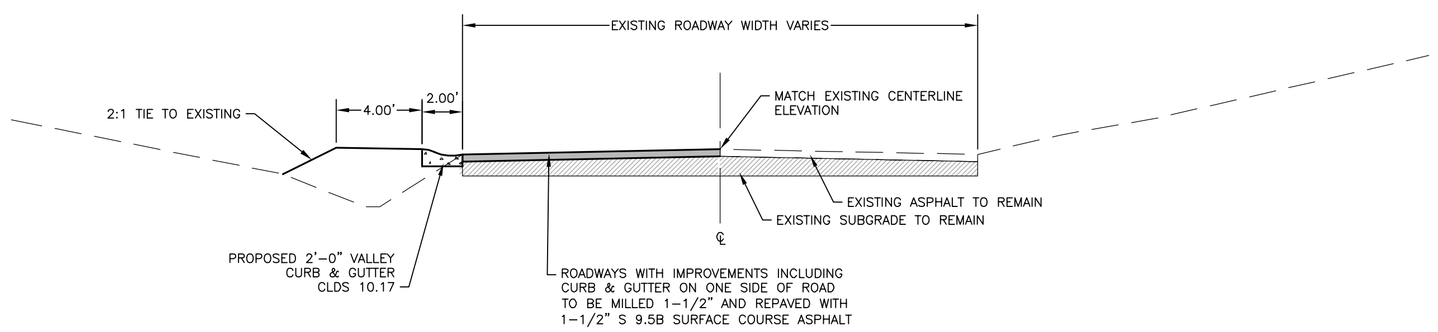

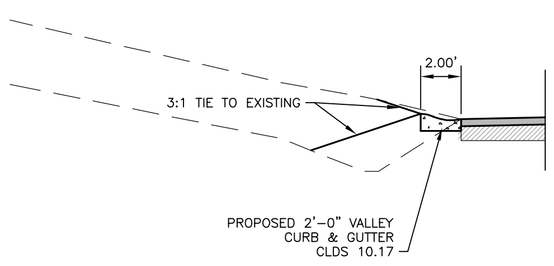

FILL BEHIND PROPOSED CURB WITH NO SHOULDER (WHERE NOTED ON CONSTRUCTION PLANS)

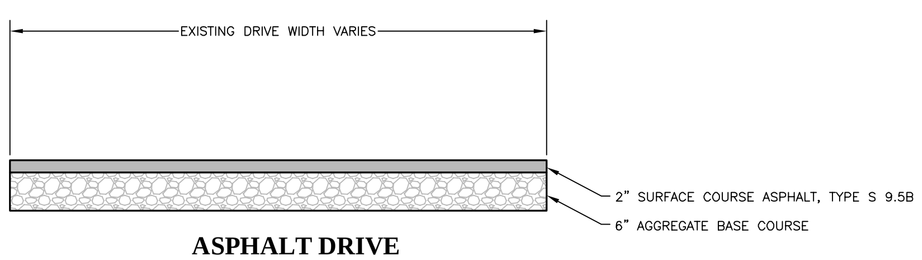

ASPHALT DRIVE REPLACEMENT SECTION

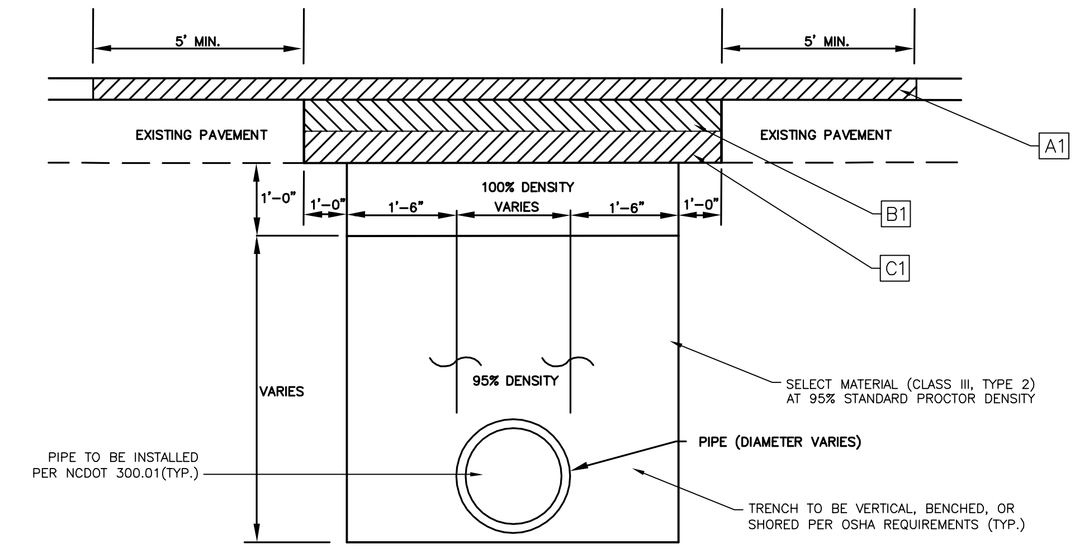

PAVEMENT REPAIR WITH MILLING

Not to scale

No Degradation Fee

DETAIL 1

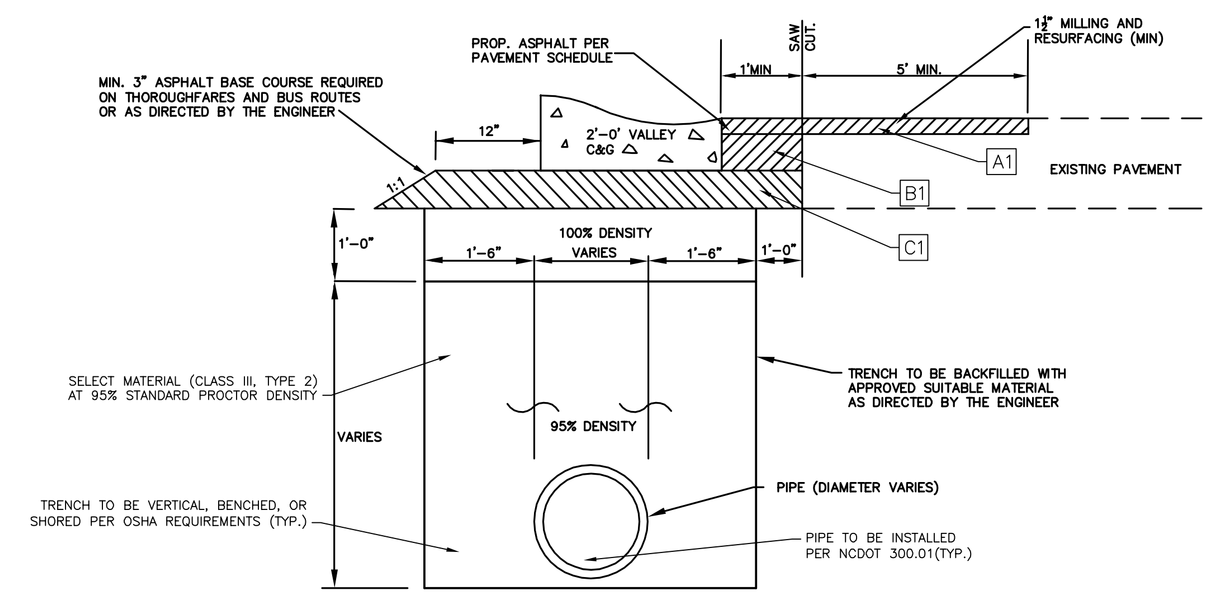

PAVEMENT REPAIR WITH MILLING AT CURB AND GUTTER WITH STORM DRAINAGE

Not to scale

No Degradation Fee

DETAIL 2

PAVEMENT SCHEDULE:

ALL ASPHALT PAVEMENT REPLACEMENT WITHIN THE ROADWAY LIMITS MARKED FOR MILL AND REPLACE, CUT & PATCH, OR ANY OTHER PAVEMENT APPLICATION SHALL COMPLY WITH THE FOLLOWING PAVEMENT SCHEDULE:

	TYPE	DESCRIPTION	APPLICATION RATE
A1	SF9.5A	1" ASPHALT CONCRETE SURFACE COURSE	112#/SY*IN (ONE LIFT)
B1	S9.5B	1-1/2" ASPHALT CONCRETE INTERMEDIATE COURSE	112#/SY*IN (ONE LIFT)
C1	B25.0B	4" ASPHALT CONCRETE BASE COURSE	114#/SY*IN (ONE LIFT)

CHARLOTTE.

Plans Prepared By:
PARSONS BRINCKERHOFF
121 WEST TRADE STREET
SUITE 1950
CHARLOTTE, NC 28202

NO.	DATE	BY	DESCRIPTION
1	10/14	RMG	70% COMMENTS

Charlotte-Mecklenburg STORM WATER Services

NTS	SCALE
671-12-003	JOB NO.
▲ V:\7350DA PIERSON RESDN\WRT\CAD\V7350DA1-C-DETAILS.DWG	CAD FILE PATH
KRD	CHECKED BY
RMG	PREPARED BY
JULY 2014	DATE
KRD	APPROVED BY

Pierson-Greenhaven Storm Drainage Improvements

TYPICAL SECTIONS & PAVEMENT REPAIR

SHEET D1 OF D1

NOTES:

1. CONCRETE SHALL BE CLASS "A" PER NCDOT STANDARDS SPECIFICATIONS (F'c=3000psi).
2. ALL REINFORCING STEEL SHALL BE ASTM A615 GRADE 60.
3. REFER TO PROJECT SPECIAL PROVISIONS. MATERIAL AND WORKMANSHIP SHALL CONFORM TO 2012 NCDOT STANDARD SPECIFICATIONS.

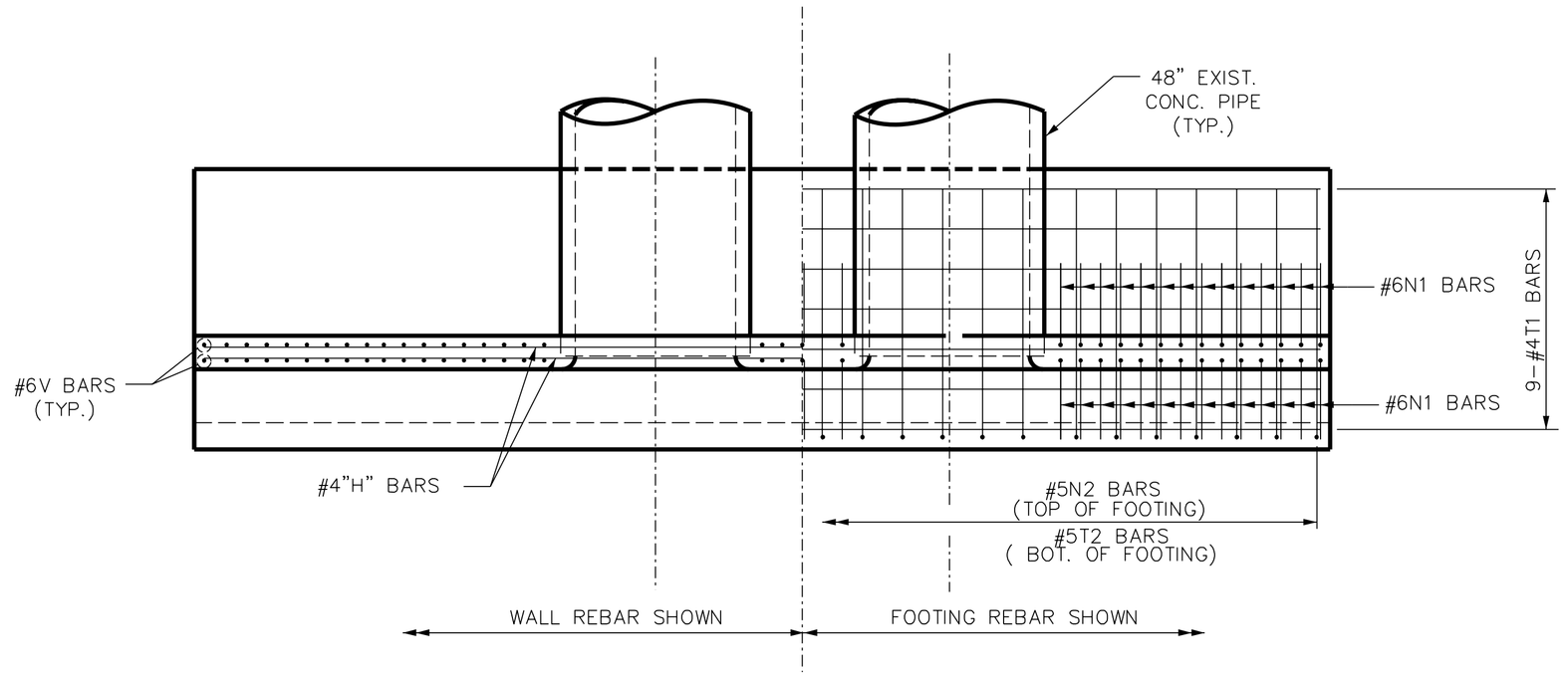

PLAN

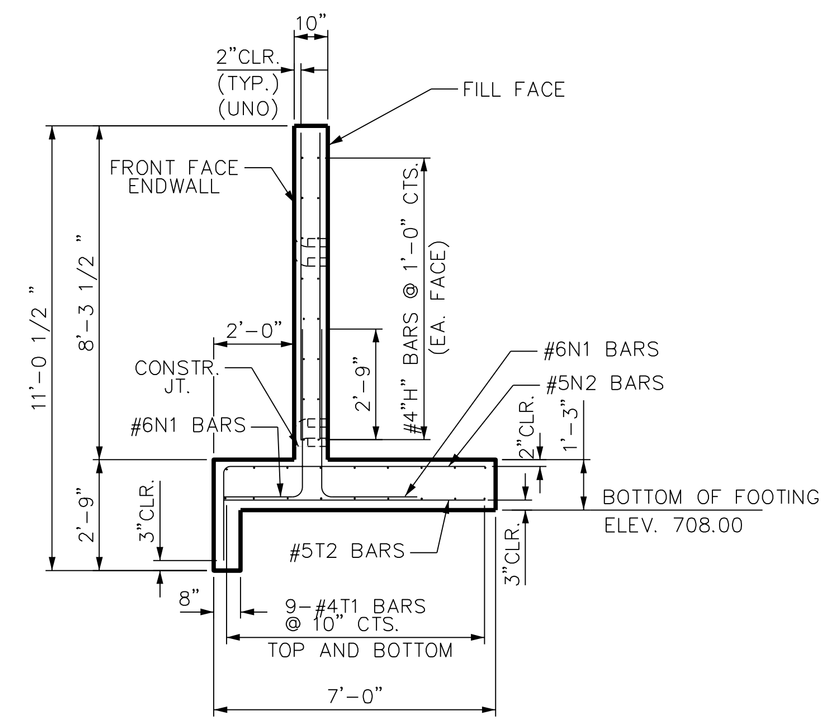

SECTION A-A

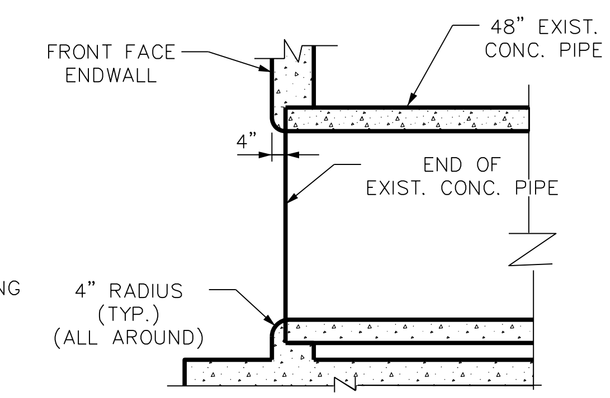

SECTION B-B

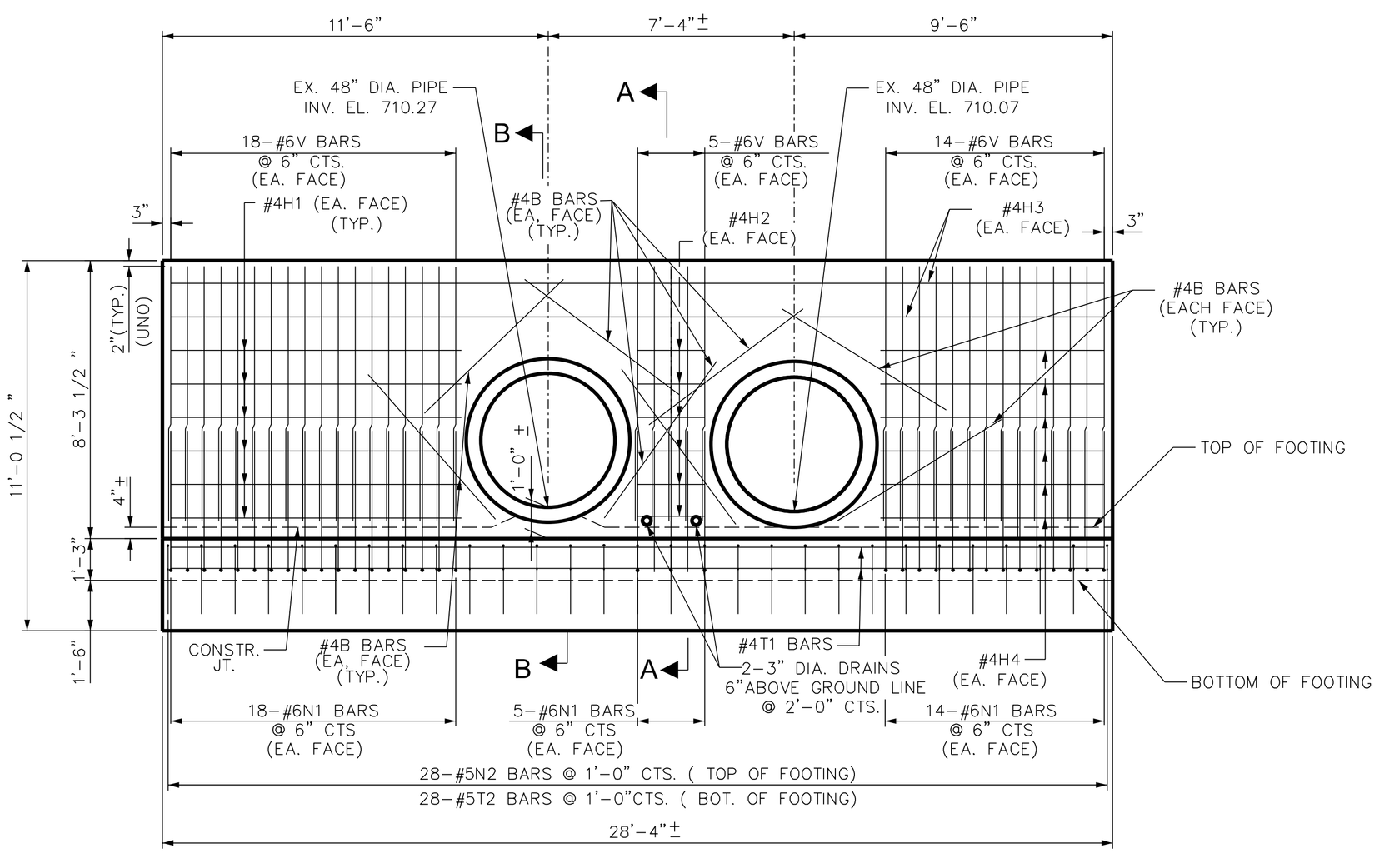

ELEVATION

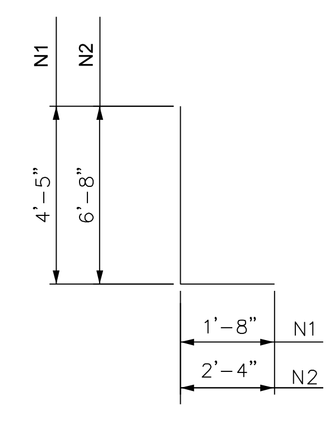

BAR BENDS

BAR DIMENSIONS ARE OUT TO OUT

PRELIMINARY
NOT FOR CONSTRUCTION

BILL OF MATERIAL FOR ENDWALL				
BAR	NO.	SIZE	LENGTH	WEIGHT
B	16	#4	5'-9"	61
H1	12	#4	8'-8"	69
H2	12	#4	2'-0"	16
H3	4	#4	28'-0"	75
H4	12	#4	6'-8"	53
N1*	74	#6	6'-1"	676
N2*	28	#5	9'-0"	263
T1	18	#4	28'-0"	337
T2	28	#5	6'-8"	195
V	74	#6	7'-8"	852
REINF. STEEL LBS.				2597
CONCRETE CU. YDS				16.3

* SEE BAR BENDS

CHARLOTTE.

Plans Prepared By:
PARSONS BRINCKERHOFF
121 WEST TRADE STREET
SUITE 1950
CHARLOTTE, NC 28202

NO.	DATE	BY	DESCRIPTION

Charlotte-Mecklenburg STORM WATER Services

J:\17.8608_Pierson_Diggin\SPR\Custom Cad\Pierson-Hp-Endwall.dgn
JOB NO. SCALE
CAD FILE PATH
EMD PREPARED BY
JPS CHECKED BY
JPS APPROVED BY
JUNE 2014 DATE

Pierson-Greenhaven Storm Drainage Improvements

MODIFIED CONCRETE ENDWALL

SHEET S-1 OF S-1